PAVEMENT CUT AND REPAIR STANDARDS MANUAL

TOWN OF SUNNYVALE

JUNE 2004

TOWN OF SUNNYVALE
PAVEMENT CUT AND REPAIR MANUAL

TABLE OF CONTENTS

PART 1 - Pavement Cut and Repair Standards

A. INTRODUCTION 1

B. STREET EXCAVATION AND INSTALLATIONS 1

C. JACKING, BORING, OR TUNNELING 5

D. BACKFILL OPERATIONS 6

E. PAVEMENT REPAIRS 8

F. RESTORATION DETAILS 10
   1. Pavement Cut and Repair Extent – Residential 10
   2. Pavement Cut and Repair Extent - Multiple Lane Streets 12

G. TYPICAL CROSS SECTIONS 14
   1. Replacing Concrete Pavement 14
   2. Replacing Asphaltic Concrete Pavement with Concrete Base 16
   3. Replacing "Full Depth" Asphaltic Concrete Pavement on Natural Soil Base 18
   4. Replacing Asphaltic Concrete Pavement on Flexible Base 20
   5. Replacing Penetration Type Pavement on Flexible Base 21
   6. Replacing Special Pavement 22

H. RESTORATION DETAILS FOR NEWLY CONSTRUCTED, RECONSTRUCTED, OR RESURFACED STREETS 24

I. PROJECT SIGN 29

PART 2 - Ordinance

Ordinance 9.700 Certain Uses of Public Right-of-Way

PART 1 - Pavement Cut and Repair Standards

PAVEMENT CUT AND REPAIR MANUAL

A. INTRODUCTION

The purpose of this manual is to provide the standards and process details for implementation of Ordinance 9.700 "Certain Uses of Public Right-of-Way" of the SUNNYVALE TOWN CODE. A copy of this ordinance is attached as Part 2 of this manual and shall govern all pavement cuts, repairs and excavations in street and alley rights-of-way and utility access easements. The ultimate goal of this manual is to maintain a high standard for the restoration of public street rights-of-way and easements, to avoid damage to other utilities or improvements and to provide safety and convenience for the public, and is not intended to interfere with the utility's type of construction or equipment used.

The following is a list of other goals that should be utilized:

1. Maximize protection of the public and work force during construction;

2. Minimize inconvenience and disruption to adjacent landowners;

3. Provide quality pavement replacements on pavement cuts;

4. Minimize future maintenance cost to the Town;

5. Minimize time of lane closures or restrictions and interruption of traffic flow.

B. STREET EXCAVATION AND INSTALLATIONS

1. The removal and replacement of portions of existing concrete pavement, drives, slabs, sidewalks, etc., shall require breakout grooves to be sawed by the use of an approved power driven concrete saw in accordance with this specification and details shown on the plans or as directed by the Director.

   Locations shown on the plans are indicative only of the need for grooves, and where designated locations coincide with or fall within 3 feet of the present location of either dummy joints, construction joints, or expansion joints, breakout shall be to existing joints; in this case, there will be no necessity for cutting additional grooves. Sawed breakout grooves shall be cut perpendicular to the surface of the pavement and shall be sawed to a minimum depth of 1½ inches or to such depth required to form a neat breakout line in the concrete pavement when the pavement is removed.

   Removal and replacement of sidewalks shall be to the nearest existing joint not damaged by the construction. Street and alley pavement removals shall have no horizontal dimension less than 3 feet and in concrete pavements shall not leave any existing portion of pavement

in place less than 3 feet as measured to the nearest joint or edge of pavement except that for curb and gutter, a gutter of at least 12" inches may remain, provided that the curb and gutter is not damaged by the construction activity.

2. Excavation in town street or alley pavements should begin with an air-hammer shovel, a pavement breaker, or other equipment that will not damage the pavement outside an approximate width of the ditch prior to beginning trenching operations.

   If the excavation is to pass under an existing curb in which there is no dummy/expansion joint, the utility/contractor may saw cut a smooth line one (1) foot beyond each side of the disturbed base. If no damage to curb is evident to the Town Inspector, the utility/contractor may pump concrete under curb and gutter for cuts less than one (1) foot wide. The Town Inspector, prior to concrete being placed under existing curb and gutter, will make this determination.

3. The following additional requirements shall govern installation:

   a. No portion of pipe, conduit, line or other conveyance of utility service shall be placed less than twelve (12) inches below the bottom of the existing pavement base or subgrade. All lines, pipes, conduits, etc. shall be marked with standard marker tape (Terra-Tape by Reef Industries, 1-800-231-2417, or equal).

   b. All excavations shall be backfilled with acceptable materials in the required lifts and to the required densities provided in the Backfill Operations section of this manual.

   c. All subgrades and pavements excavated or damaged by the repair activity shall be restored as provided in the Pavement Repairs and Restoration Details sections of this manual.

   d. The responsible person shall provide a landscape protection plan during the term of the construction to minimize damage to existing landscape and facilities. All damaged trees, shrubs or ground covers shall be restored or replaced. Replaced ground cover and seeded areas shall be fertilized and watered and maintained as required until lawn areas are reestablished. Irrigation systems shall be repaired to pre-construction condition and extent.

   e. The responsible person shall repair or replace all damaged or removed traffic control devices in accordance with Town standards to the pre-construction condition and extent as required by the engineer.

   f. In the event that it is necessary to place a temporary surface on any cut opening, the temporary surface shall be composed of hot mix asphalt or cold mix paving materials. Gravel or flexbase surface material shall not be used as a temporary surface on any cut

unless the preexisting street surface was gravel or flexbase. Temporary surfaces shall be adequately compacted to prevent deterioration of repair during the temporary period.

g. If the cut is to be covered, the contractor shall use steel plates of sufficient strength and thickness to support all traffic. The plates must be sufficiently secured in place so as not to become dislodged or in anyway cause a hazard to traffic. Asphalt transitions shall be placed as required to provide an acceptably smooth riding surface.

h. Any temporary surface that fails to provide a non-deteriorating riding surface or fails to meet the requirements of these specifications shall be removed and replaced at the Director's discretion, at the responsible person's expense.

The Director must approve any exceptions to these provisions. Failure to make repairs in accordance with these standards may result in correction of the defects, by the Town, with all response and repair performed at the contractor's expense. All billing to the contractor for work performed by the Town due to contractor noncompliance with this manual, and the ordinance shall be at actual town cost for materials, labor, equipment and overhead plus actual indirect costs, as determined by the Director, and such cost shall be considered to reflect the actual cost for the work performed.

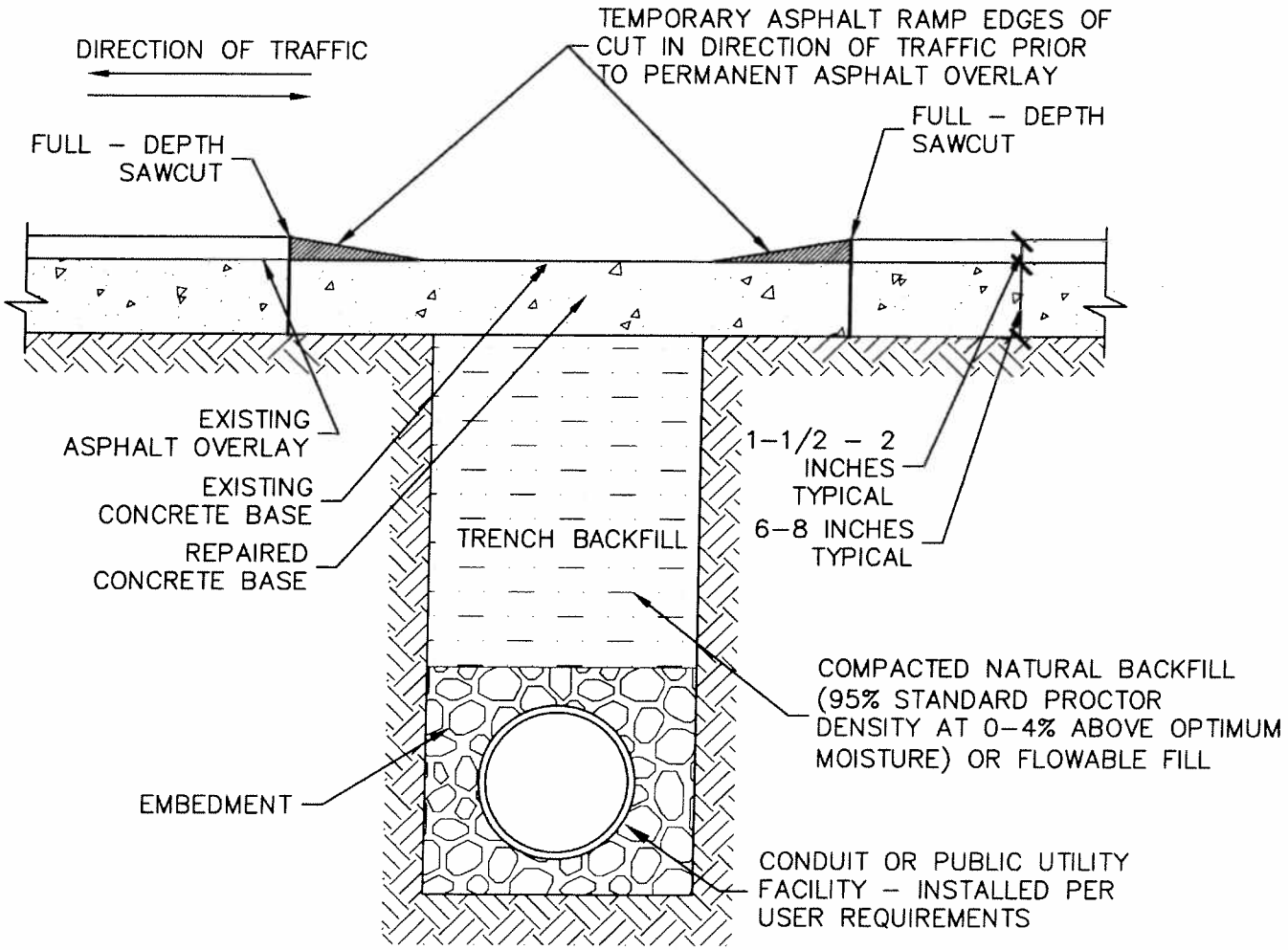

DETAIL 1

CROSS-SECTION ILLUSTRATION FOR REPAIR TO ASPHALT STREET w/ CONCRETE BASE

C. JACKING, BORING, OR TUNNELING

1. Where pipe is to be installed under a roadway structure using jacking, boring, directional drilling, or tunneling methods, the construction will be in compliance with the provisions of Item 503.3 "Jacking, Boring, or Tunneling" of the Standard Specifications for Public Works Construction - North Central Texas and the Town of Sunnyvale addendum thereto. The following will be a guide of procedure for boring operations:

2. Prior to scheduled boring operations, plans for the proposed construction must be submitted to the Town for approval.

3. All water mains must be located in advance of construction by potholing when crossing over or under the water mains or where the water main is running in the same direction and is within 5 feet of the proposed facility.

4. Construction shall be made in such a manner that will minimize interference with vehicular traffic and shall not weaken or damage the existing street.

   a. The location of the boring pits shall be of sufficient distance from the roadway to prevent undermining of the curb, gutter or shoulder section (normally 5 feet).

   b. The pit shall be dug to a depth sufficient to maintain a minimum boring depth of twenty-four (24) inches below the traffic surface. Jetting types of boring equipment will not be allowed.

   c. Over cutting in excess of approximately two (2) inches shall be remedied by pressure grouting the entire length of the installation.

   d. The pits or trenches excavated to facilitate this operation shall be backfilled immediately after work has been completed. The backfill shall be compacted to a density equal to the requirement for installation of town storm drainage facilities as specified on the Town's Standard Construction Details. During construction operations, barricades, flashers, signs and other appropriate traffic control devices to safeguard traffic and pedestrians shall be furnished and maintained, in accordance with the latest edition of the Texas Manual on Uniform Traffic Control Devices, as currently amended until the job has been completed, at which time they shall be removed.

5. The contractor shall be able to locate the bore head at all times.

D. BACKFILL OPERATIONS

The following requirements pertain to backfill operations:

1. The Director shall have the authority to direct any entity or contractor to use flowable fill to backfill a trench or excavation in the public right-of-way in the interest of preserving the public convenience or safety.

2. All excess water and mud must be removed from the trench prior to backfilling. Any backfill placed during a rainy period or at other times where excess water cannot be prevented from entering the trench shall be considered temporary and must be removed as soon as weather permits. All backfills shall be compacted and surfaced with a minimum of one (1) inch cold mix or hot mix asphalt to improve traffic surface until permanent repair can be accomplished.

3. Following removal of any excess water and mud from the trench, the utility can be installed and bedded with granular material per utility requirements. The trench shall then be backfilled with selected materials from the excavation or with flowable backfill material as follows:

   a. For all excavation and pavement cuts exceeding width and length of 5' backfill shall use select materials from the trench excavation. Excavated material used in backfilling shall be an earth free of all hard rock, stones, or boulders, having dimensions greater than (6") six inches and frozen earth, debris and roots larger than 2". Excavated material may not be used if it is water saturated. If trench excavation materials are not acceptable, then flowable backfill material shall be used for backfill as provided in this manual. In the event rock is encountered, the rock excavation can be used for backfill provided it is processed as required in this manual. During freezing weather where repairs must be made to restore or maintain service, crush stone may be used when approved by the Director for backfill.

      That portion of backfill, which will not support any portion of any sidewalk, driveway, or roadway, shall be placed in layers not exceeding 10 inches in depth (loose measurement) and compacted to a density comparable with the adjacent, undisturbed material.

      That portion of the backfill which lies more than 12 inches below any portion of any sidewalk, driveway, alley, or roadway or other pavement shall be compacted by mechanical compaction to a density of 95% of Standard Proctor density at 0-4% optimum moisture of samples of the backfill material as determined by the "Maximum Density Optimum Moisture Test" as provided in ASTM designation D698. If hand pneumatic tampers are used, the backfill shall be placed in layers not exceeding 3" and thoroughly tamped in place.

If heavier tampers (that is, operated by combustion engines, electric motors, or hydraulic cylinder) or mechanically driven compaction equipment are used, the thickness of the layers may be increased to a maximum of eight (8) inches provided the required density is obtained. The backfill shall be placed in uniform layers completely across the trench and compaction shall progress in an orderly and uniform manner. Utmost care must be taken in tamping in this manner to prevent damage to the conduit. All layer thicknesses shall be as measured by loose measurement.

Instead of backfilling with excavated material as provided above, the contractor may backfill the trench with flowable backfill material as provided in this manual.

b. All pavement excavations equal to or less than 5' in length or width shall be backfilled with flowable backfill material, unless the Director authorizes an alternate backfill method and material.

c. Flowable Backfill material shall meet the following requirements.

Flowable Backfill material, also called unshrinkable fill and slurry concrete, shall be a controlled density material consisting of cement and/or fly ash, sand and water meeting the requirements of high strength fast fix flowable fill or low strength fast fix flowable fill.

(1) High strength fast fix flowable fill (H.S. Four F) shall consist of an appropriate amount of cement (with other additives as necessary) mixed wet with mortar sand to flow and fill all voids in the excavation. This fill shall develop a minimum compressive strength of 2,160 pounds per square foot (15 psi) one hour after placement, and a 28-day compressive strength within the range of 300 psi to 500 psi The material must be such that it can be capped in 1½ to 2 hours.

(2) Low strength fast fix flowable fill (L.S. Four F) shall consist of an appropriate amount of cement (with other additives as necessary) mixed with mortar sand to flow and fill all voids in the excavation. This fill shall develop a compressive strength of 1120 pounds per square foot (7.8 psi) one hour after placement, and a 28-day compressive strength within the range of 25 to 100 psi The material must be such that it can be capped in 1½ to 2 hours.

(3) Any materials used shall be primarily granular, with a plasticity index less than 12 and with 100% passing a ¾" sieve.

(4) Flowable Fill Base shall be a flowable fill meeting the requirements of high strength fast fix flowable fill.

(5) The use of flooding as a means of obtaining compaction of backfill shall not be allowed on existing public streets, alleys or sidewalks.

d. In addition to the provisions above, the portion of the backfill which lies within twelve (12) inches below any portion of any driveway or "improved" roadway shall be compacted to secure a density of not less than 98% of Standard Proctor Density at 0-4% above optimum moisture of samples of the material as determined by the "Maximum Density Optimum Moisture Test" ASTM designation D 698. The backfill material shall be moistened when required to obtain satisfactory moisture content and compaction. If the flowable fill method of backfill is used, the flowable fill material shall be placed to the base of the pavement.

e. The contractor will be required to provide a testing lab to perform the appropriate tests, to ensure quality control for all phases of the backfill, at his expense. One density test shall be taken for each 400 feet of trench per 100 foot of depth. The results shall be supplied to the Town within three days of the backfill work completion.

f. If the backfill repairs do not meet these requirements, the backfill shall be considered unacceptable and shall be removed and replaced. In cases where backfill is unacceptable and the utility/contractor refused to make the backfill acceptable, the work may be accomplished by the Town and all the direct and indirect costs back charged to the utility/contractor responsible for the work.

g. The Town may perform, or have performed, any material tests needed as indicated by the situations described below:

(1) Visual inspection by the inspector shows poor quality of workmanship or materials.

(2) Any other unusual circumstances that cause the Inspector to doubt the quality of work.

All laboratory tests or retests shall be the responsibility of the utility/contractor doing the work, at his sole expense.

E. PAVEMENT REPAIRS

1. Pavement repairs are to be made as rapidly as is consistent with high quality workmanship and materials. Use of fast setting concrete and similar techniques is encouraged insofar as possible without sacrifice of the quality of the repair. Unless otherwise allowed by the Director, excavations on thoroughfares must be filled and compacted or properly plated within 24 hours.

2. Core holes shall be repaired as follows:

   a. For core holes exceeding one-foot depth, the hole shall be filled with a nonshrink grout having a compressive strength of 4500 psi after 28 days. The grout material used shall be compatible with the existing surface in color and texture and shall seal the hole to prevent the intrusion of moisture into the subgrade.

   b. For core holes not exceeding one-foot depth, which pass into the subgrade, the subgrade shall be tamped to provide pavement support first and the hole shall be filled with the required nonshrink grouts as in No.1 above.

   c. On asphalt streets, hot mix fine graded surface course asphaltic concrete tamped in place shall be used in place of the non-shrink grout.

   d. The surface of the completed repair shall have no indentions, pockets or recesses that may trap and hold water, nor have bumps or high places but the completed surface shall match the grade of the existing pavement surface.

   e. The surface of the completed repair shall have no indentions, pockets or recesses that may trap and hold water, nor have bumps or high places but the completed surface shall match the grade of the existing pavement surface.

   f. Repair of cored holes 12-inches in diameter or less for subsurface geotechnical investigation, materials testing, or utility relocations are not subject to the repair extent standards, but shall be repaired as noted above.

   g. All excavations considered destructive or disturbing to the surrounding pavement such as the use of a backhoe to break the pavement will be subject to the repair extent standards no matter the reason for the excavation.

3. After placement of temporary repairs is completed, the utility/contractor shall clean and remove all debris and barricades from the area, and maintain the pavement cut until permanent repairs are made. Final pavement repairs shall be made by the utility/contractor within a 14 calendar day period after temporary repairs are made.

   All permanent patches and repairs shall be appropriate to the surface. For example, reinforced concrete pavement repairs shall be required for streets with concrete surfaces, reinforced concrete base with asphalt hot mix overlay pavement repairs shall be required for "overlaid" concrete streets, etc. In no case shall there be an asphalt repair in a concrete street or a concrete repair in an asphalt street.

4. Replacement of Curb and Gutter, Sidewalk and Alleys shall be as follows:

Construction of support base and curb and gutter, sidewalk and alley pavement shall be as required by the Standard Specifications for Public Works Construction, the Town of Sunnyvale Addendum to the standard Specifications and the Town's Standard Construction Details.

Class "Hand Finish" concrete shall be used to replace cuts in concrete alley pavement and "Sidewalks, Separate Curb and Gutter, and Median Pavement" class of concrete shall be used to replace curb and gutter, sidewalk and median concrete pavement.

Alley pavements shall be restored using like materials in accordance with the pavement details provided in this manual.

5. All materials used to replace pavement base and pavement shall be in accordance with the requirements of this manual, the Standard Specifications for Public Works Construction, the Town Addendum thereto, and the Town's Standard Construction Details.

F. RESTORATION DETAILS

The size of the street repair area will typically always be larger than the size of the excavated area. Parts F.1 and F.2 of this section provide the detail and specifications for the horizontal dimensions of the street repair area. Section F.2 provides information regarding the street repair including the backfill and pavement specifications by showing the cross-section detail for the most typical cases that may be encountered in the field.

The street repair area specifications are shown by variable width residential street and by multiple lane streets. This should cover most typical cases encountered in the field. If any questions should arise regarding the size of the street repair area, contact the Director for a final determination.

1. Pavement Cut and Repair Extent – Residential

The following detail entitled "Pavement Cut and Repair Extent – Residential, Standard Drawing 3070C" shall be used to determine the extent to which pavement repairs are required to be made when repairing an excavation to a street that is older than 5 years. This standard applies to all excavation street repairs on residential streets not covered by section F. Restoration Details for Newly Constructed, Reconstructed, or Resurfaced Streets addressed in this manual.

GENERAL NOTES

1. REMOVE AND REPLACE A MINIMUM OF 4' (ASPHALT) OR 3' (CONCRETE) LONGITUDINAL, OR 2' (ASPHALT) 1' (CONCRETE) FROM THE EDGE OF THE TRENCH, WHICHEVER IS GREATER
2. IF WITHIN 3' OF AN EXISTING JOINT, THEN REMOVE TO THE EXISTING JOINT
3. MULTIPLE LOCATIONS ARE TO BE A MINIMUM OF 10' APART FROM EDGE OF REPAIR TO EDGE OF REPAIR, IF LESS THAN 10' APART, A CONTINUOUS SECTION MUST BE REPLACED.
4. A GUTTER OF AT LEAST 12" MAY REMAIN, PROVIDED THAT THE CURB AND GUTTER IS NOT DAMAGED BY THE CONSTRUCTION ACTIVITY.
5. EXACT PAVEMENT REMOVAL LOCATIONS TO BE APPROVED BY OWNER PRIOR TO CONSTRUCTION.

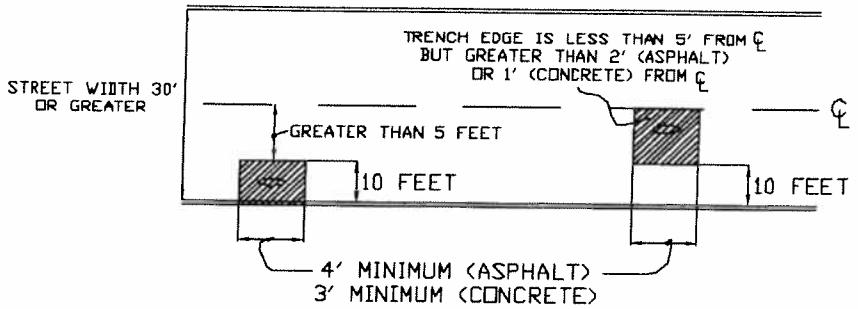

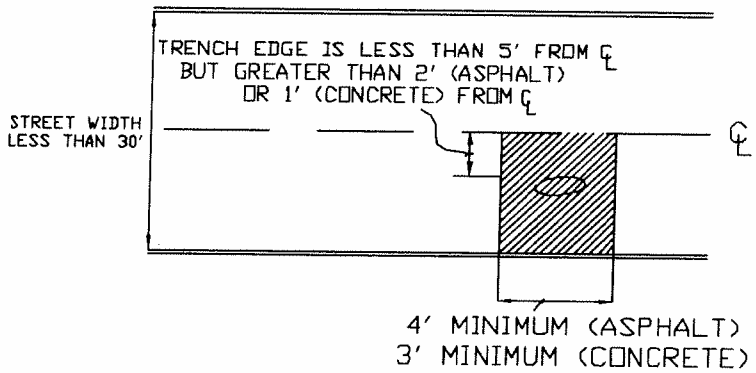

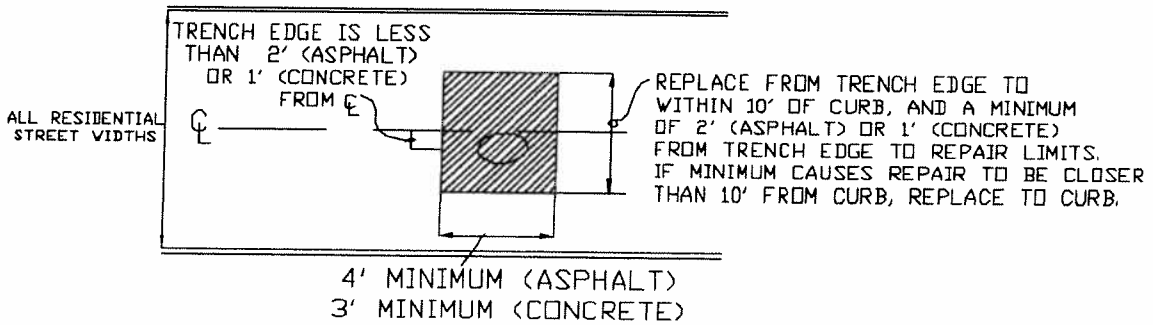

VARIABLE WIDTH RESIDENTIAL STREET

PAVEMENT CUT AND REPAIR	North Central Texas Council of Governments	STANDARD SPECIFICATION REFERENCE 402	
EXTENT – RESIDENTIAL		DATE DEC '02	STANDARD DRAWING NO. 3070C

2. Pavement Cut and Repair Extent - Multiple Lane Streets

The following detail entitled "Pavement Cut and Repair Extent - Multiple Lanes, Standard Drawing 3070D" shall be used to determine the extent to which pavement repairs are required to be made when repairing an excavation to a street that is older than 5 years. This standard applies to all excavation street repairs on multiple lane streets not covered by section F. Restoration Details for Newly Constructed, Reconstructed, or Resurfaced Streets addressed in this manual.

GENERAL NOTES

1. REMOVE AND REPLACE A MINIMUM OF 3' (CONCRETE) OR 4' (ASPHALT) LONGITUDINAL, OR 1' (CONCRETE) OR 2' (ASPHALT) FROM THE EDGE OF THE TRENCH, WHICHEVER IS GREATER
2. IF WITHIN 3' OF AN EXISTING JOINT, THEN REMOVE TO THE EXISTING JOINT
3. MULTIPLE LOCATIONS ARE TO BE A MINIMUM OF 10' APART FROM EDGE OF REPAIR TO EDGE OF REPAIR. IF LESS THAN 10' APART, A CONTINUOUS SECTION MUST BE REPLACED.
4. A GUTTER OF AT LEAST 12" MAY REMAIN, PROVIDED THAT THE CURB AND GUTTER IS NOT DAMAGED BY THE CONSTRUCTION ACTIVITY.
5. EXACT PAVEMENT REMOVAL LOCATIONS TO BE APPROVED BY OWNER PRIOR TO CONSTRUCTION.

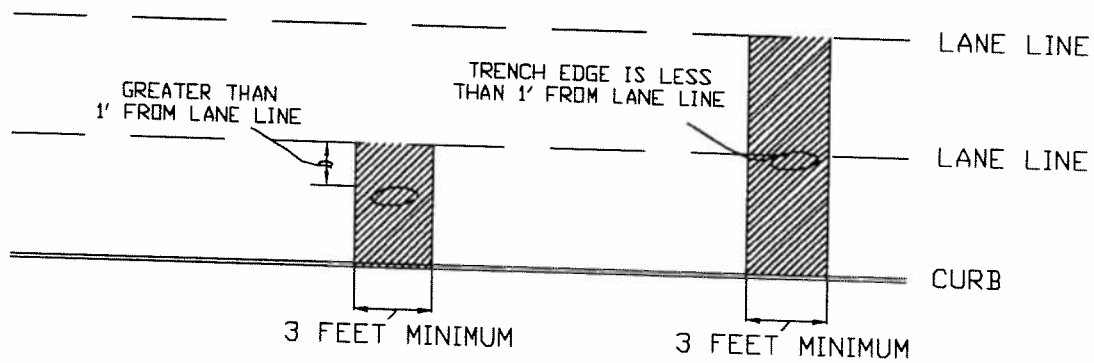

VARIABLE WIDTH CONCRETE STREET
WITH MULTIPLE LANES

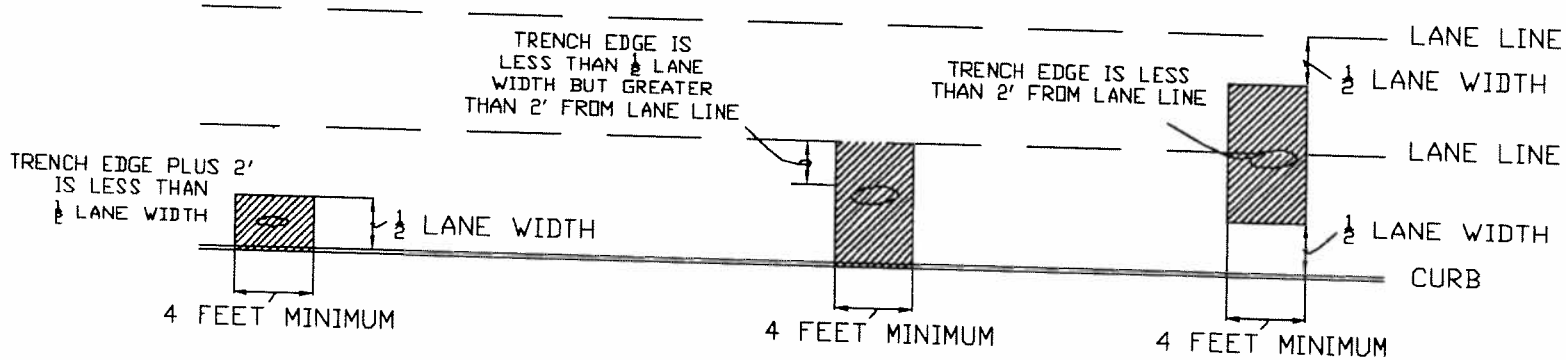

VARIABLE WIDTH ASPHALT STREET
WITH MULTIPLE LANES

STANDARD DRAWING NO.
3070D

PAVEMENT CUT AND REPAIR	North Central Texas Council of Governments	STANDARD SPECIFICATION REFERENCE 402	
EXTENT – MULTIPLE LANES		DATE DEC '02	STANDARD DRAWING NO. 3070D

G. TYPICAL CROSS SECTIONS

1. Replacing Concrete Pavement

The existing pavement shall be and removed in accordance with this manual to a line at least twelve (12) inches back of the firm banks of the trench. The backfill shall be brought up to the elevation of the bottom of the existing pavement and satisfactorily densified in accordance with Section D of this manual. Reinforcing bars shall be replaced with like-size bars lapping thirty (30) diameters with a minimum of eighteen (18) inches on splices. If splices cannot be made with the existing pavement reinforcing bars or if there are no existing reinforcing bars apparent, the existing concrete pavement shall be drilled 12 inches deep and like size dowel bars with a minimum length of 30 inches shall be epoxy grouted into the existing slab 12 inches deep on 24 inch centers along the sides of the exposed existing concrete pavement cut and lapped with the new reinforcing bars. If no existing reinforcing bars are apparent, the spacing and bar size of the new reinforcing bars shall be #4 bars on 24-inch centers. The concrete pavement shall be replaced using the appropriate class of concrete. Classes of concrete shall be as provided in the Standard Specifications. All concrete construction specified herein shall be protected from vehicular traffic, including vehicles of the contractor, until the concrete is not less than 7 days old unless quick set concrete materials are approved for use. A compressive strength of at least 3000 psi shall be achieved before vehicular traffic is allowed on the new pavements. "Sidewalks, Separate Curb and Gutter, and Median Pavement" class of concrete shall be used to replace these concrete pavements. "Hand Finish" class of concrete shall be used to replace street, alley and driveway pavement. The pavements and structures provided shall match the finish and thickness of the existing pavements and structures, but street and alley pavements shall be not less than the following:

- Six (6) inches for local streets, alleys and driveways. (Local streets are typically residential streets with a width not exceeding 31 feet.
- Eight (8) inches for residential collectors and commercial driveways.
- Nine (9) inches for thoroughfares and collectors.

See Detail 2 - Replacing Concrete Pavement below:

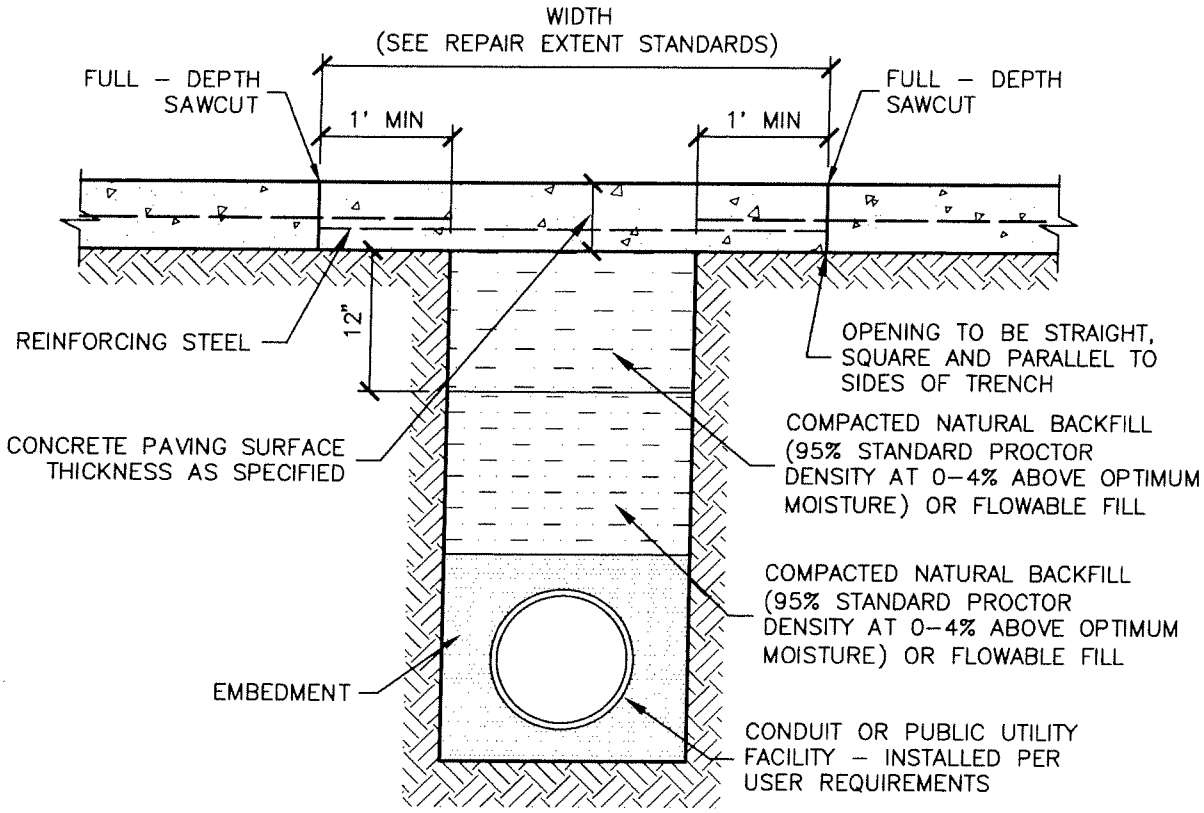

DETAIL 2

REPLACING CONCRETE PAVEMENT

2. Replacing Asphaltic Concrete Pavement with Concrete Base

The existing pavement shall be removed to a neat line at lease twelve (12) inches back of the firm banks of the trench. The backfill shall be brought up to the bottom of the pavement and satisfactorily densified in accordance with Section F of this manual.

Reinforcing bars shall be replaced with like-size bars lapping thirty (30) diameters or a minimum of eighteen (18) inches on splices. If splices cannot be made with the existing pavement reinforcing bars or if there are no existing reinforcing bars apparent, the existing concrete pavement shall be drilled 12 inches deep and like size dowel bars with a minimum length of 30 inches shall be epoxy grouted into the existing slab 12 inches deep on 24 inch centers along the sides of the exposed existing concrete pavement cut and lapped with the new reinforcing bars. If no existing reinforcing bars are apparent, the spacing and bar size of the new reinforcing bars shall be #4 bars on 24-inch centers. The concrete base shall be replaced with "Hand Finish" class concrete to a line two inches below the asphaltic concrete surface of the street and a thickness matching the existing concrete base except that the thickness shall be no less than the following:

- Six (6) inches for local streets. (Local streets are typically residential streets with a width not exceeding 31 feet.)
- Eight (8) inches for residential collectors.
- Nine (9) inches for thoroughfares and collectors.

Upon completion and curing of the concrete base, the final 2 inches of permanent pavement repair shall be made as follows:

- Using fine graded surface course hot mix asphalt on residential streets.
- Using coarse graded surface course hot mix asphalt on collector and arterial streets.

The construction of the "Hand Finish" class concrete base and the final two thickness of fine or coarse graded surface course hot mix asphaltic concrete shall be in accordance with Standard Specifications. See Detail 3 - Replacing Asphaltic Concrete Pavement with Concrete Base below:

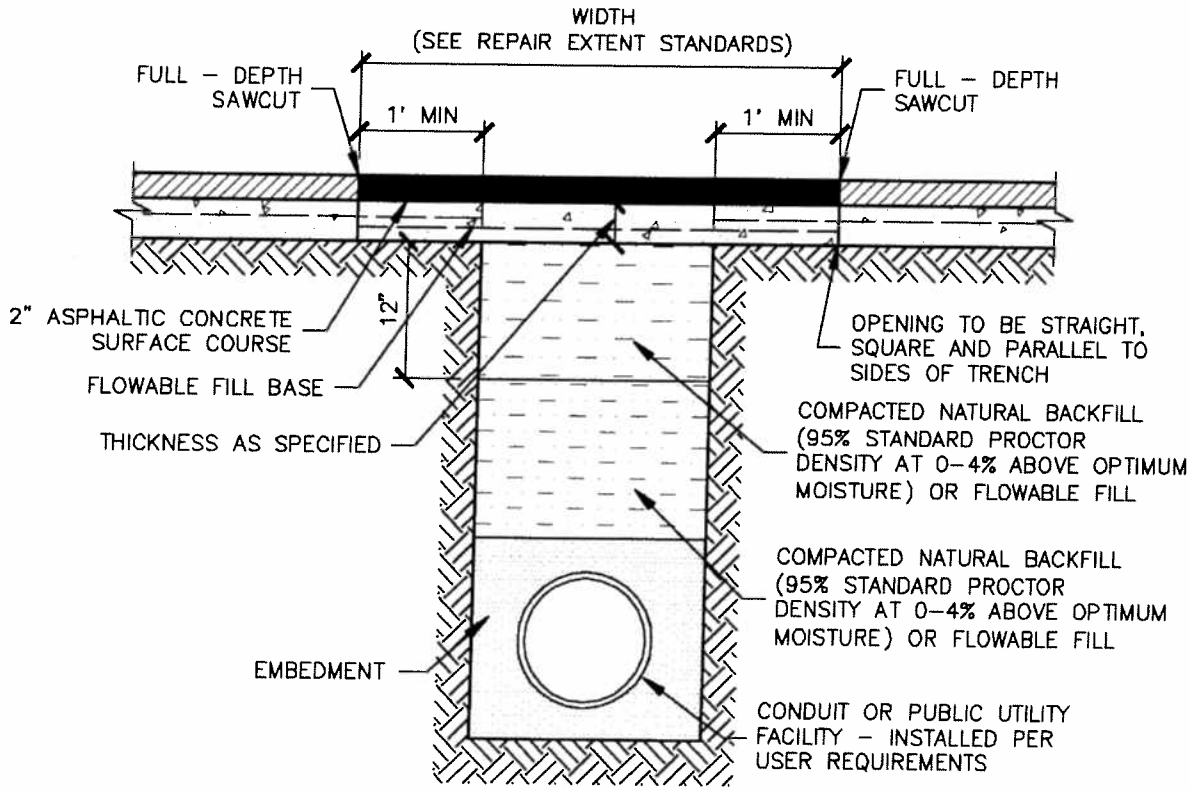

DETAIL 3
REPLACING ASPHALTIC CONCRETE WITH CONCRETE BASE

3. Replacing "Full Depth" Asphaltic Concrete Pavement on Natural Soil Base

Unless otherwise or specified, when a street surfaced with asphaltic concrete on natural soil base is cut, the pavement shall be replaced as follows. The backfill shall be brought up to the bottom of the pavement or the required depth to provide the required section of flowable fill and topping and satisfactorily densified in accordance with Section D of this manual. The edges of the existing asphaltic concrete paving shall be cut back so as to produce a vertical edge for the full depth of the paving. The cut shall then be based with flowable fill to a line two inches below the top of the asphaltic concrete surface. The thickness of the flowable fill base shall not be less than the following:

- Six (6) inches for local streets, alleys and driveways. (Local streets are typically residential streets with a width not exceeding 31 feet.)
- Eight (8) inches for residential collectors and commercial driveways.
- Nine (9) inches for thoroughfare and collectors.

Whenever the flowable fill method is used for trench backfill the flowable fill shall be placed in the trench and brought to a line two (2) inches below the top of the asphaltic concrete surface.

Upon completion and curing of the flowable backfill, the final 2 inches of permanent pavement repair shall be made as follows:

- Using fine graded surface course hot mix asphalt on residential streets.
- Using coarse graded surface course hot mix asphalt on collector and arterial streets.

The construction of the final two-inch thickness of asphaltic concrete surface over the flowable fill shall be in accordance with Item 302.9 of the Standard Specifications. See Detail 4 - Replacing "Full Depth" Asphaltic Concrete Pavement on Natural Soil below:

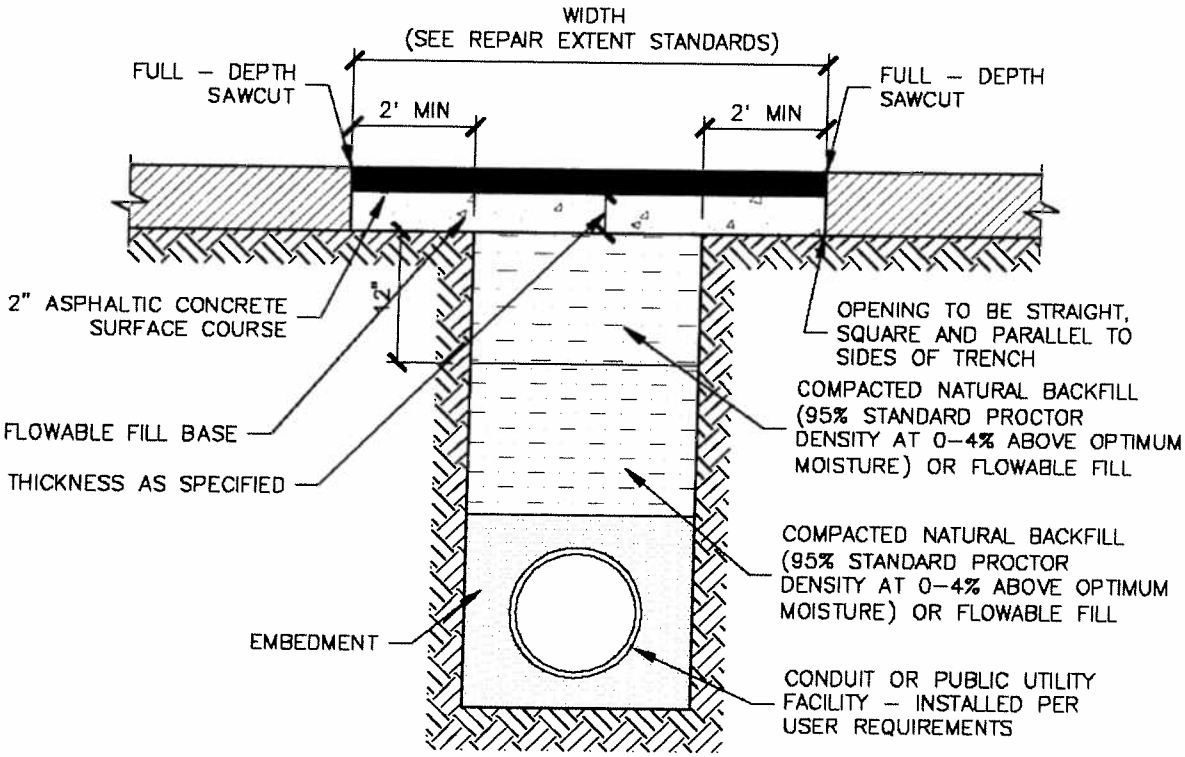

DETAIL 4
REPLACING "FULL DEPTH" ASPHALTIC CONCRETE PAVEMENT ON NATURAL SOIL

4. Replacing Asphaltic Concrete Pavement on Flexible Base

Unless otherwise indicated or specified, when a street surfaced with asphaltic concrete on flexible base is cut, the pavement shall be replaced as follows: The backfill shall be brought up to the bottom of the flexible base and satisfactorily densified in accordance with section D of this manual. The edges of the existing asphaltic concrete paving shall be cut back so as to produce a vertical edge for the full depth of the paving. The cut shall then be based with flowable fill to a depth matching the existing thickness of flexible base but in no case less than 6 inches. The construction of the final two inches of pavement shall be fine or coarse graded surface course hot mix asphaltic concrete as provided in Section G.3 "Replacing Full Depth Asphaltic Concrete Pavement on Natural Soil" of this Manual and shall be in accordance with the Standard Specifications for Public Works construction.

Whenever the flowable fill method of backfill is used the material shall be placed, full depth, to a line 2" below the top of the asphaltic concrete surface. The final asphaltic concrete hot mix shall be placed as required in this item over the flowable fill to a thickness not less that 2 inches. See Detail 5 - Replacing Asphaltic Concrete Pavement on Flexible Base below:

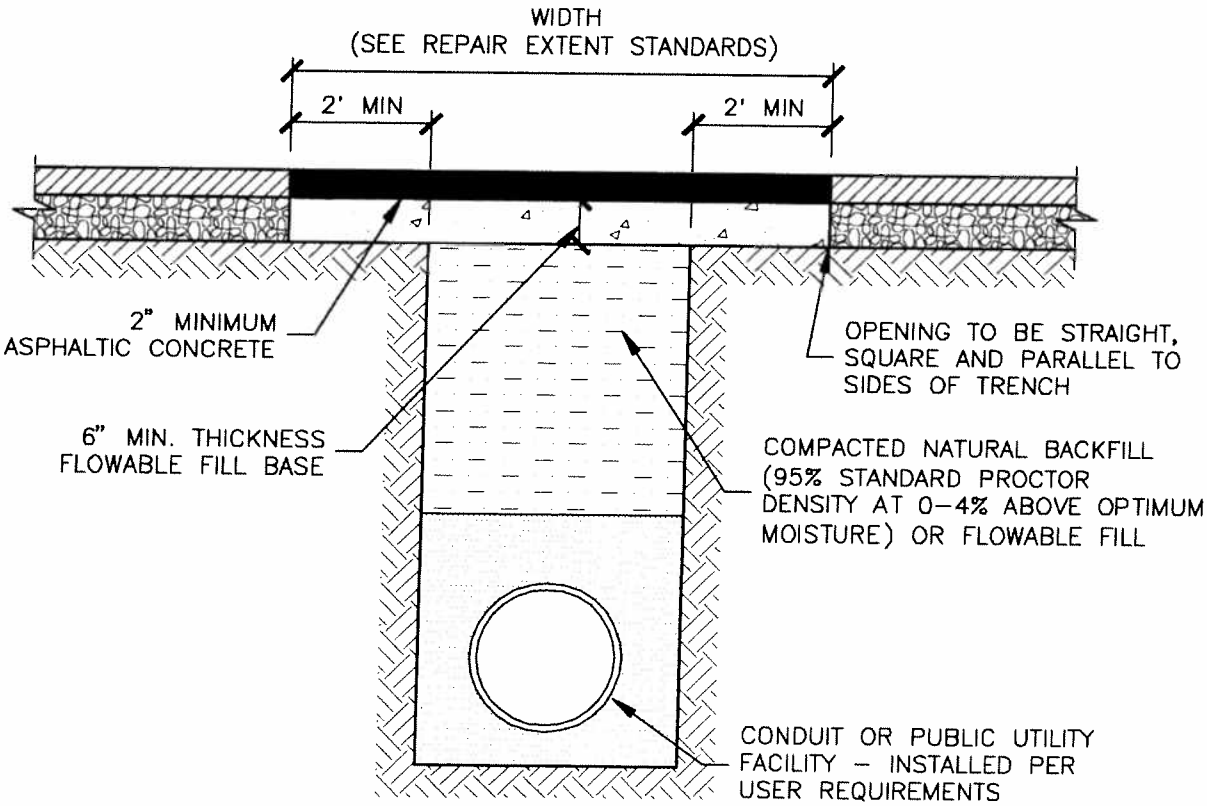

DETAIL 5

REPLACING ASPHALTIC CONCRETE PAVEMENT ON FLEXIBLE BASE

5. Replacing Penetration Type Pavement on Flexible Base

Unless otherwise indicated or specified, when a street surfaced with penetration type pavement on flexible base is cut, the pavement shall be replaced as follows. The backfill shall be satisfactorily densified in accordance with section D of this manual. The cut shall then be based with flowable fill to a depth matching the existing thickness of flexible base but in no case less than 6 inches. The installation of the final two inches of asphalt surface shall be surface course hot mix asphaltic concrete as provided for in Section G.3 "Replacing 'Full Depth' Asphaltic Concrete Pavement on Natural Soil Base" of this Manual and shall be in accordance with the Standard Specifications for Public Works Construction.

Whenever the flowable fill method is used, backfill shall be used ill depth and brought to a line not to exceed 2" below the top of the existing asphaltic concrete surface. The flowable fill method is preferred and shall be used to limit the inconvenience to the general public. See Detail 6 - Replacing Penetration Type Pavement on Flexible Base below:

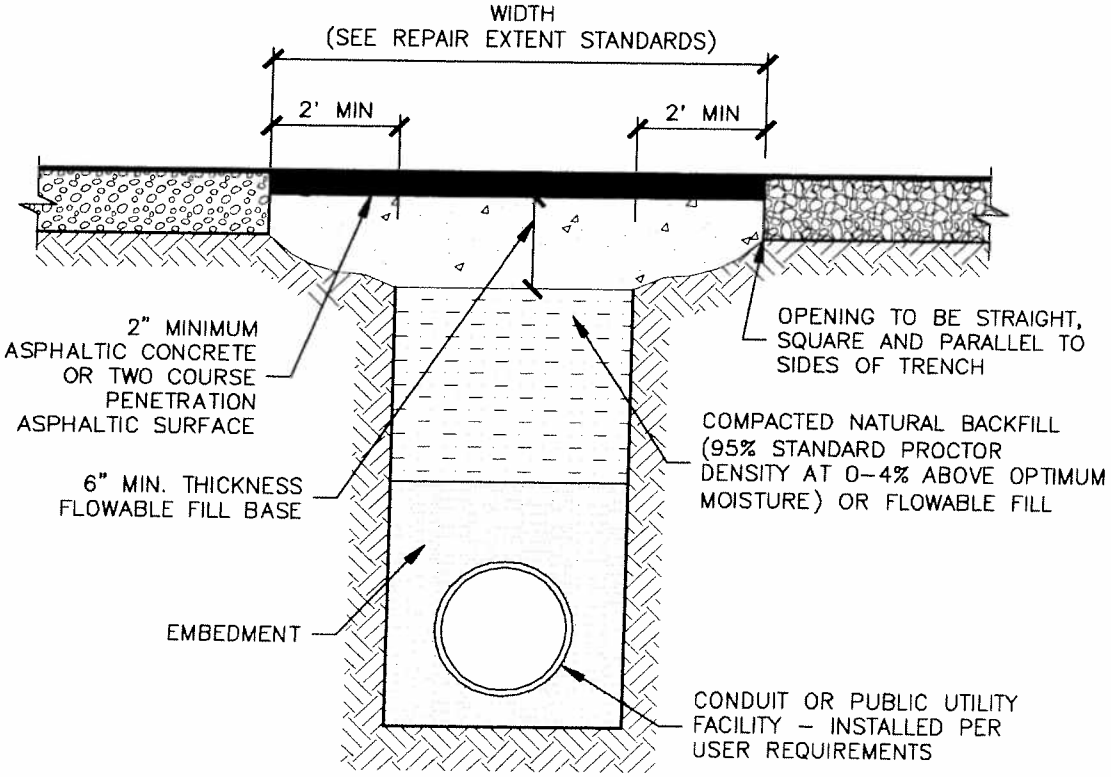

DETAIL 6
REPLACING PENETRATION TYPE PAVEMENT ON FLEXIBLE BASE

6. Replacing Special Pavement

Special Pavements are those with a surface of brick, stone, exposed aggregate, manufactured paving blocks or other surfaces designed to present unique visual images, color or designs. Cuts or excavations in these special pavements shall be avoided whenever possible, by accomplishing repairs through boring or tunneling.

When a cut or excavation in a special pavement in a street, alley, median or sidewalk of the public street right of way is unavoidable, the contractor shall, in addition to complying with the requirements of all applicable preceding repair standards, take whatever additional measures are necessary to restore the pavement area to a condition equal to or better than the preexisting condition. Removals shall be from joint or back of curb to joint or back of curb. Saw cutting of special pavements shall not be permitted.

To establish the preexisting condition of the pavement prior to the cut or excavation, the contractor may take pictures before the work begins. The presence of a photograph taken prior to the actual repair activity shall not relieve the contractor of the responsibility to correct any damage to special pavements caused by the condition of the utility facility or the repair activity. However, all pavement restoration shall be to the satisfaction of the Director and entirely at the contractor's expense. The contractor shall match the color, texture and pattern of the existing pavement.

Concrete base shall be "Hand Finish" class concrete for streets, alley and driveways and "Sidewalks, Separate Curb and Gutter, and Four (4) Inch Thick Median Pavement" class concrete for other non-vehicular traveled pavements.

Thicknesses shall be:

- 5" for pedestrian (non-vehicular traveled) pavements. 8" for local and residential collectors.
- 8" for local and residential collectors.
- 9" for thoroughfares and collectors.

Paver reinstallation shall be as required by the Town. Classes of concrete and construction shall be as provided in the Standard Specifications. See Detail 7- Replacing Special Pavement below:

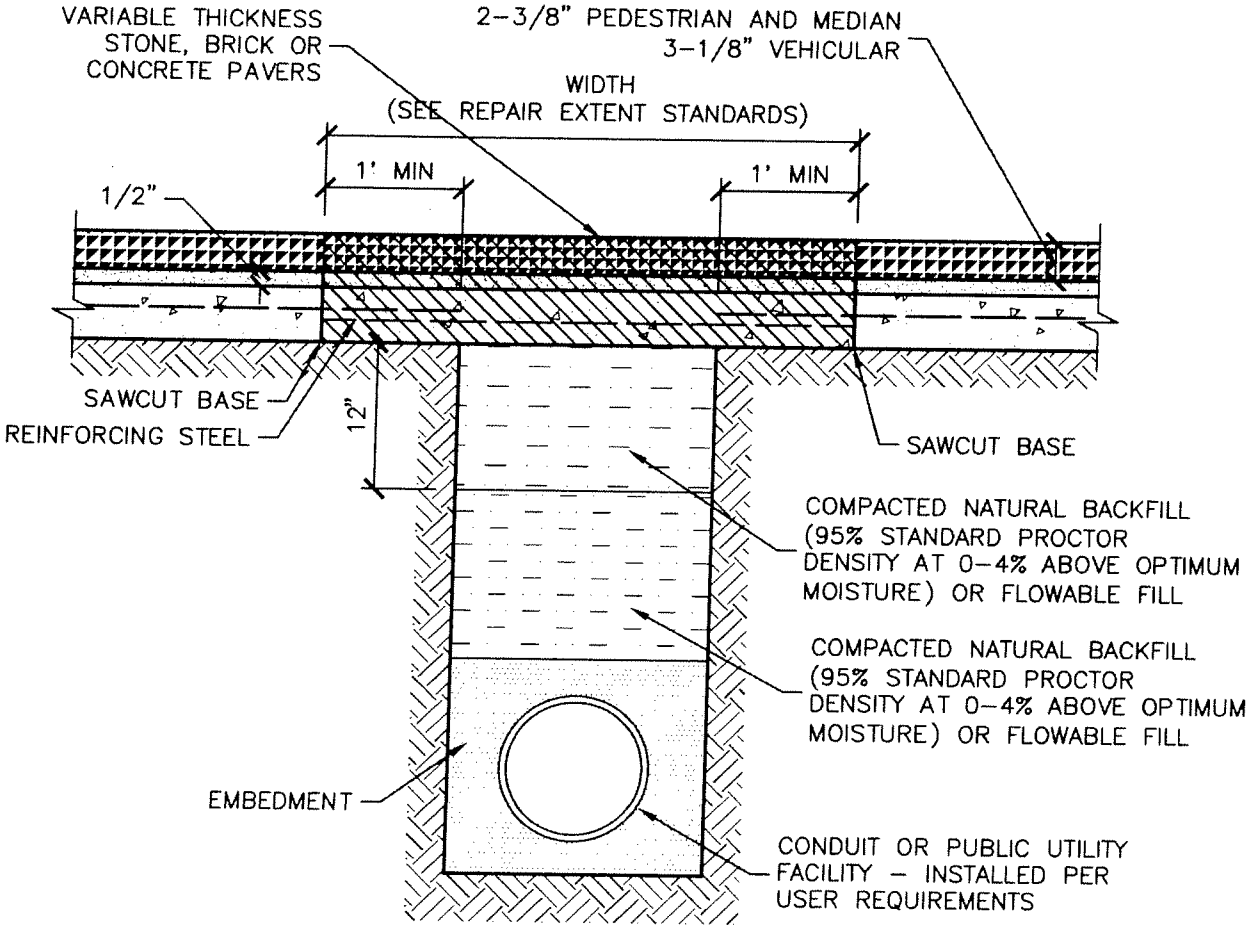

DETAIL 7

REPLACING SPECIAL PAVEMENT

NOTE: * REMOVAL OF PAVERS SHALL BE AT LEAST THE MINIMUM SHOWN TO THE NEXT WHOLE PAVER BLOCK.

H. RESTORATION DETAILS FOR NEWLY CONSTRUCTED, RECONSTRUCTED, OR RESURFACED STREETS

Replacement of pavement in a newly constructed, reconstructed, or resurfaced street may not be made for 60 months after substantial completion of the work unless repairs are made in compliance with the preceding details in Section F, Restoration Details and to the extent described below.

The contractor should not proceed with pavement restoration until the Director approves the replacement limits. For asphalt streets, restorations will be no less than one lane width and extend no less than three feet in the longitudinal direction from the edge of the cut. For concrete streets, the removal limit will extend beyond the edge of the cut to the nearest expansion, construction or dummy joint or to the point halfway between the two joints where the edge of the cut terminates, whichever is less. The cut width includes the required 1-foot to either side of the trench excavation.

For asphalt streets, the contractor may be required to slurry seal the asphalt pavement for uniformity.

Some examples of restorations to cuts made on newly constructed, reconstructed, or resurfaced streets are shown on the following pages:

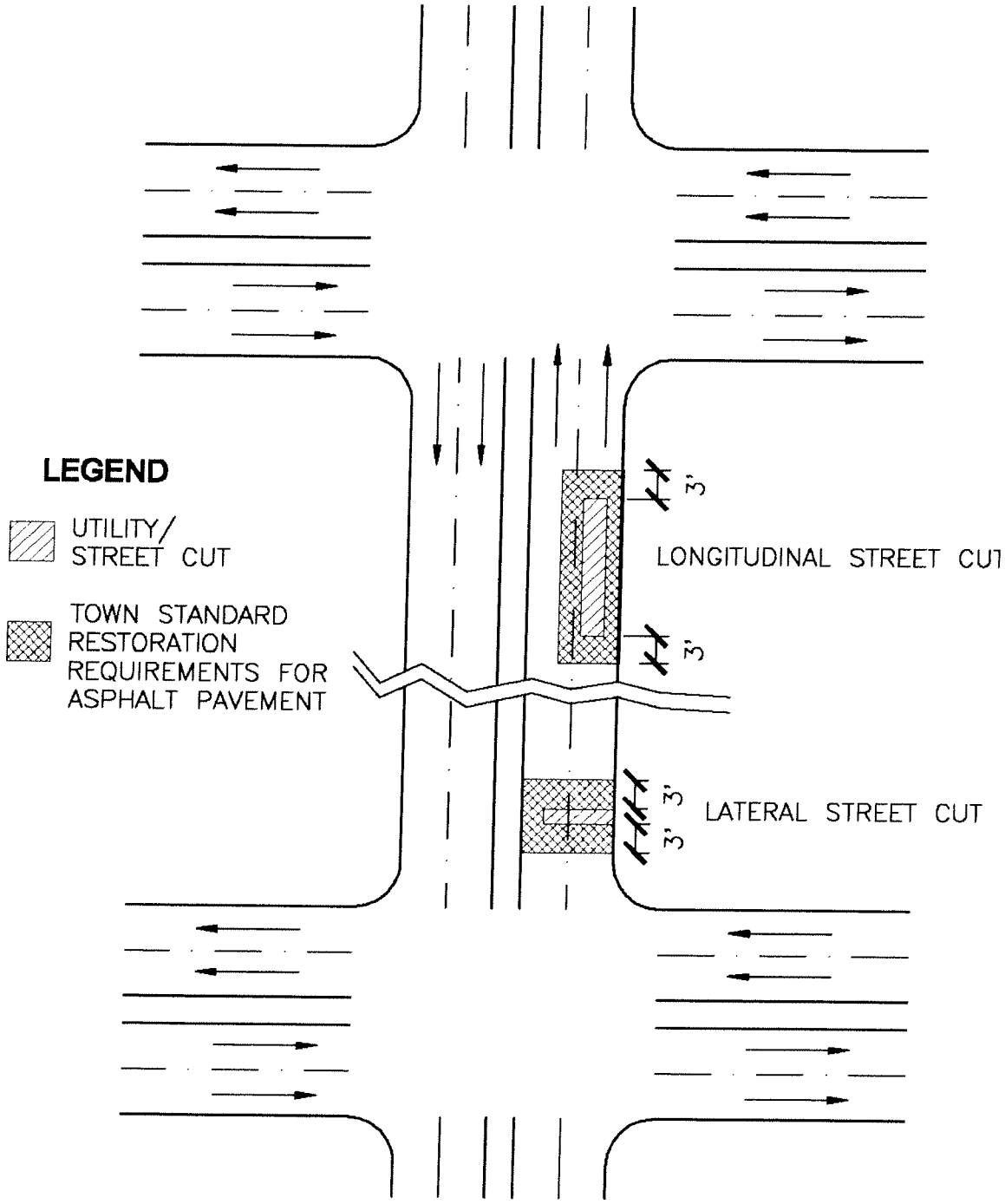

DETAIL 8

TYPICAL RESTORATION LIMITS FOR ASPHALT PAVEMENT

TO REPAIR CUTS TO STREETS 5 YEARS OLD OR LESS

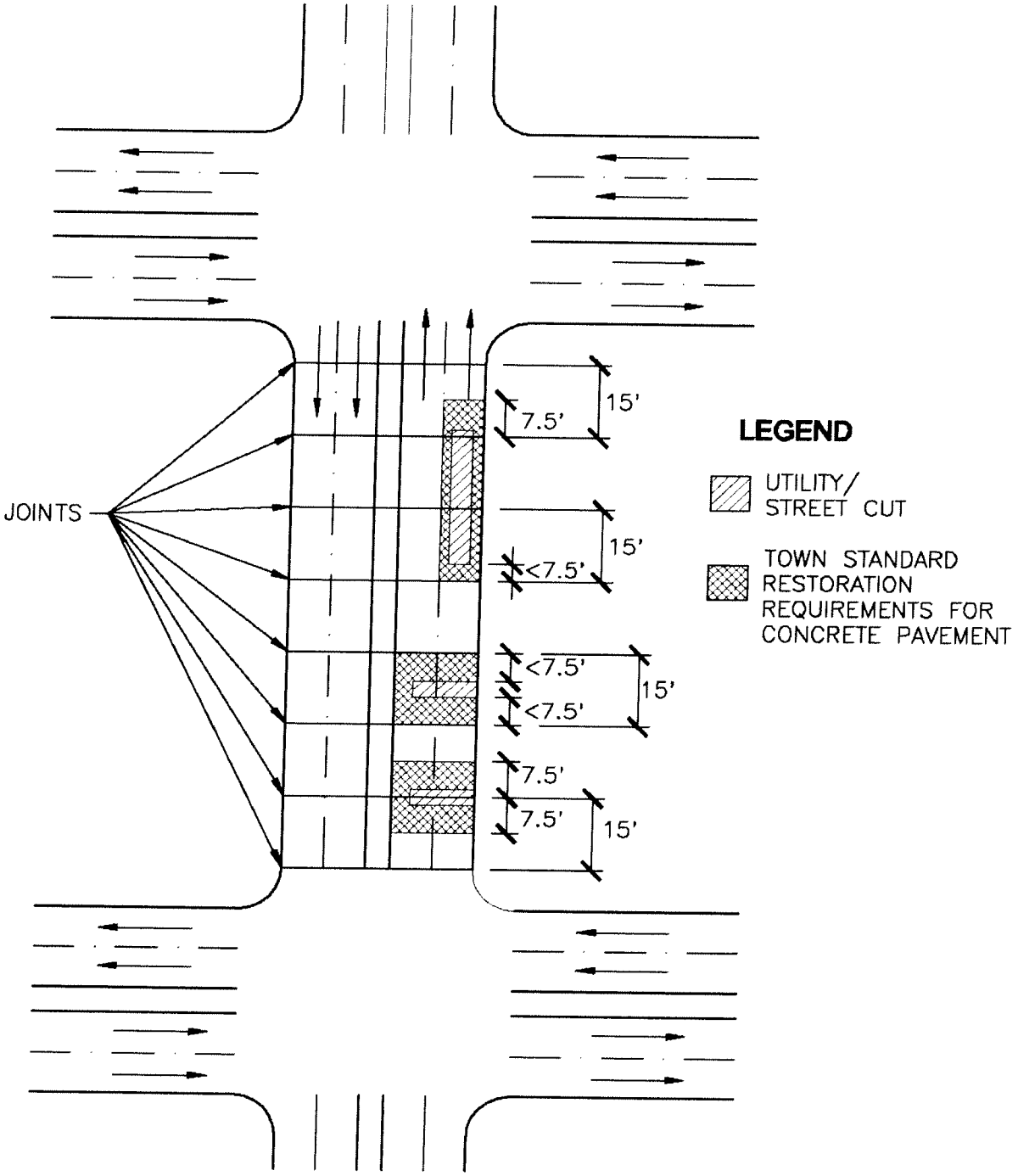

DETAIL 9

TYPICAL RESTORATION LIMITS FOR CONCRETE PAVEMENT

TO REPAIR CUTS TO STREETS 5 YEARS OLD OR LESS

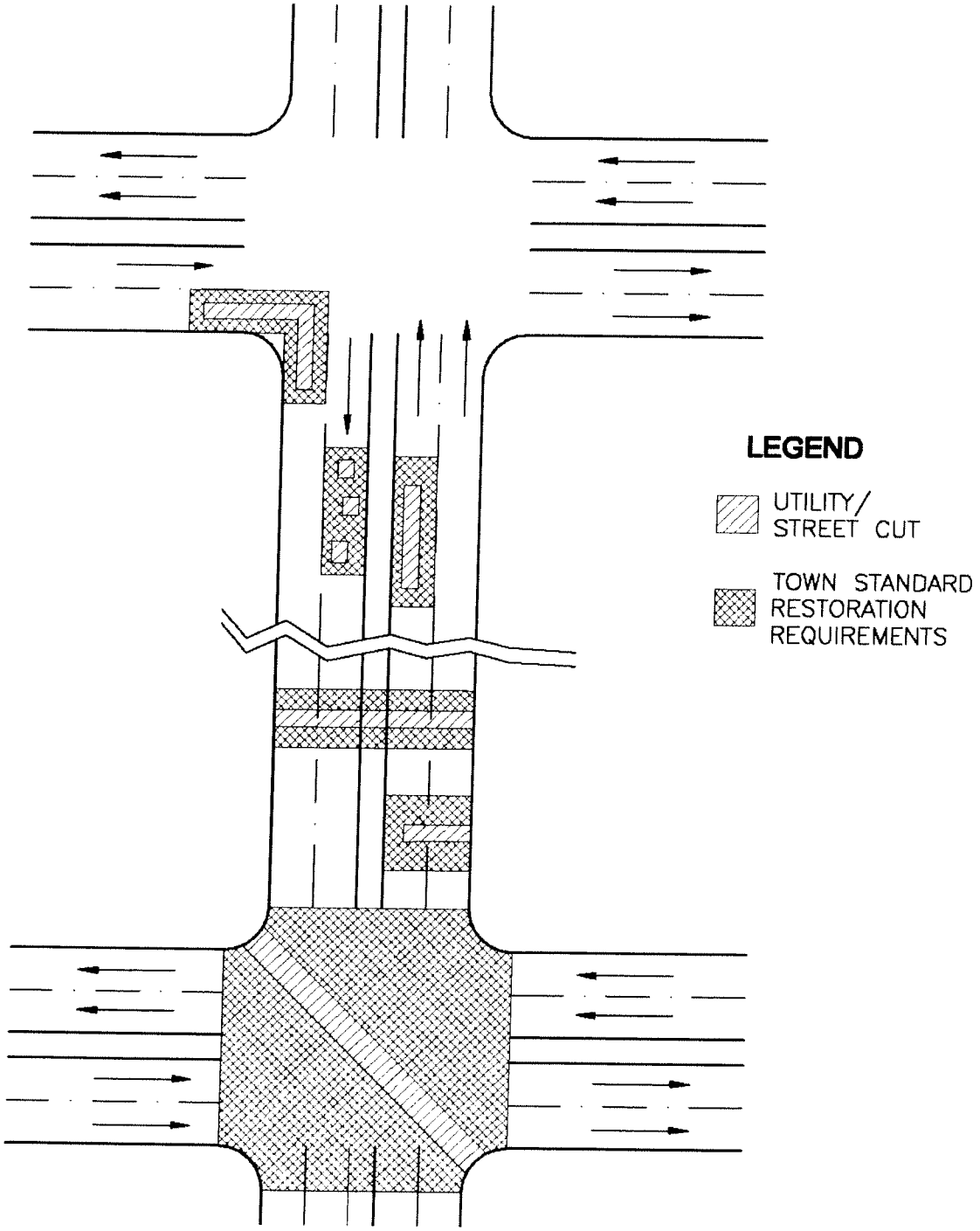

DETAIL 10

EXAMPLES OF RESTORATION LIMITS FOR NEWLY CONSTRUCTED, RECONSTRUCTED, OR RESURFACED STREETS

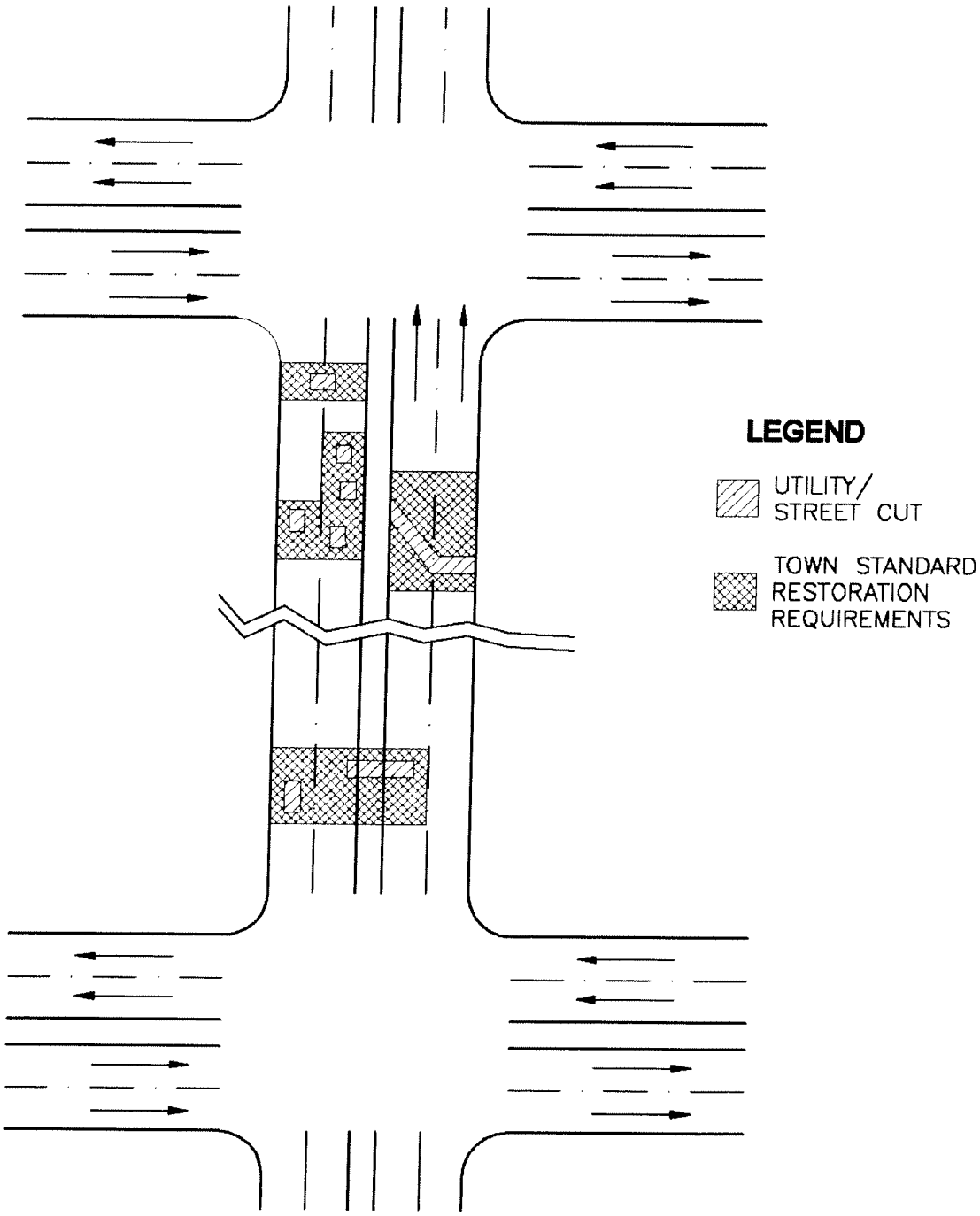

DETAIL 11

EXAMPLES OF RESTORATION LIMITS FOR NEWLY CONSTRUCTED, RECONSTRUCTED, OR RESURFACED STREETS (CONT.)

I. PROJECT SIGN

A project sign is required for work where there will be any closure of a traffic lane or blocking of a sidewalk or alley for longer than one day. The sign must be built to the specification contained in this manual. The sign must be posted at or in close proximity to the worksite. The sign may be attached to the barricading used at the project site in lieu of the specified wooden stand. A previously used sign with updated information may be used at a project site subject to the discretion of the inspector.

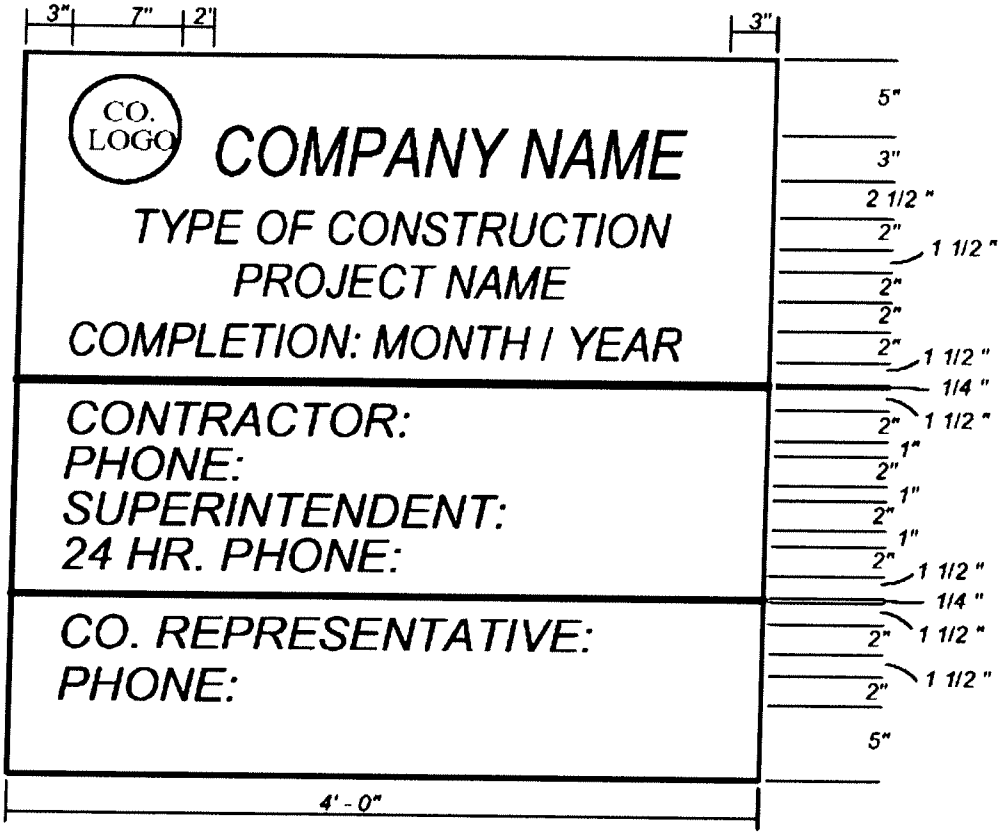

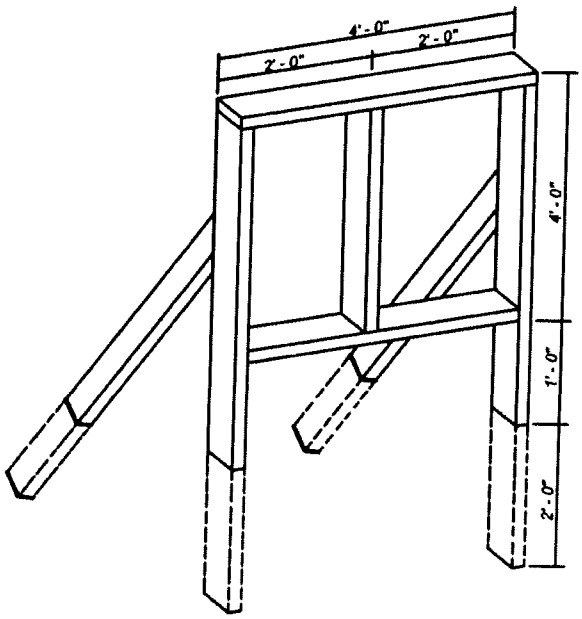

NOTES:

1. BOARD - 3/4 " EXTERIOR OR MARINE GRADE PLYWOOD OR APROVED EQUAL, PAINTED WHITE.
2. COMPANY SYMBOL - REFLECTIVE VINYL APPROX. 6" HIGH
3. STRIPES - DARK REFLECTIVE VINYL APPROX. 1/4 " WIDE.
4. LETTERING - HELVETICA REGULAR 3" & 2" SIZES. USE PREMANUFACTURED VINYL, DARK.
5. FRAME OF 2"X4" STOCK TO BE PAINTED BLACK.
6. ALL PAINT TO BE OUTDOOR TYPE.

SIGN DETAIL

PART 2 - Ordinance 9.700 Certain Uses of Public Right-of-Way

TOWN OF SUNNYVALE, TEXAS

ORDINANCE NO. 397

AN ORDINANCE OF THE TOWN COUNCIL OF THE TOWN OF SUNNYVALE, TEXAS, AMENDING THE CODE OF ORDINANCES IN CHAPTER 9 THEREOF TITLED THE TOWN OF SUNNYVALE SUBDIVISION AND PROPERTY DEVELOPMENT REGULATIONS BY PROVIDING FOR A NEW ARTICLE 9.700 WHICH COMPREHENSIVELY REGULATES STREET CUTS AND OTHER USES OF PUBLIC RIGHT OF WAY; DEFINING TERMS; PROVIDING FOR REGISTRATION OF PUBLIC SERVICE PROVIDERS WITH FACILITIES IN THE PUBLIC RIGHT-OF-WAY; PROVIDING PERMIT REQUIREMENTS AND PROCEDURES FOR CONSTRUCTION IN THE PUBLIC RIGHT-OF-WAY; PROVIDING INSURANCE AND INDEMNITY REQUIREMENTS FOR CONSTRUCTION IN THE PUBLIC RIGHT-OF-WAY; PROVIDING REQUIREMENTS, PROCEDURES, AND STANDARDS RELATING TO PAVEMENT CUTS, EXCAVATIONS, INSTALLATIONS, TRENCH SAFETY, AND RESTORATION IN THE PUBLIC RIGHT-OF-WAY; PROVIDING FOR MAINTENANCE AND REPAIR OF THE PUBLIC RIGHT-OF-WAY AND OF FACILITIES LOCATED IN THE PUBLIC RIGHT-OF-WAY; PROVIDING FOR EMERGENCY ACTIVITIES IN THE PUBLIC RIGHT-OF-WAY; PROVIDING FOR THE RELOCATION OF FACILITIES TO ALLOW DRIVEWAY CONSTRUCTION; PROVIDING FOR ENFORCEMENT; MAKING CERTAIN SEMANTIC, GRAMMATICAL, AND STRUCTURAL CHANGES; PROVIDING FOR AN ENFORCEMENT PROVISION; ESTABLISHING A PENALTY OF NOT LESS THAN ONE HUNDRED DOLLARS ($100.00) AND NOT MORE THAN TWO THOUSAND DOLLARS ($2,000.00); PROVIDING FOR CERTAIN EXCEPTIONS; PROVIDING A SEVERABILITY CLAUSE; AND PROVIDING AN EFFECTIVE DATE.

WHEREAS, there exists a need for regulating construction in, on, under and surrounding public rights-of-way and development of standards for such construction.

WHEREAS, in order to assure that the health, safety and general welfare of the citizens are adequately preserved it is believed that the comprehensive changes set forth herein will be in the interest of the public health, safety and general welfare and will help to obtain the foregoing objectives;

NOW THEREFORE, BE IT ORDAINED by the Town Council of the Town of Sunnyvale, Texas:

Section 1. That the above recitals are found to be true and correct and are incorporated herein for all purposes.

Section 2. That Chapter 9 of the Code of Ordinances, Town of Sunnyvale, Texas, is hereby amended by adding Article 9.700, which said article reads as shown in Exhibit "A" which is attached to this Ordinance, and which is incorporated by reference herein as if fully set forth. The proposed amendment as set forth in Exhibit "A" hereto is hereby adopted and the Code of Ordinances is revised accordingly.

Section 3. Penalties. Except as otherwise specifically set forth in Exhibit "A", whenever an act is prohibited or is made or declared to be unlawful of an offense or a misdemeanor or wherever in such Exhibit "A" the doing of an act is required or the failure to do any act is declared to be unlawful, and no specific penalty is provided therefore:

(a) the violation of any such provision shall be punishable by a fine of not less than one hundred ($100.00) dollars and not more than two thousand dollars ($2,000.00).

(b) Each day of any violation of the Street Cut and Uses of Public Right of Way ordinance shall continue and shall constitute a separate offense. Any violation of any provision which constitutes an immediate danger to the health, safety and welfare of the public may be enjoined in a suit brought by the Town for such purposes.

Section 4. Severability. It is hereby declared to be the intention of the Town Council that if any of the sections, paragraphs, sentences, clauses and phrases of this Ordinance shall be declared unconstitutional or otherwise illegal by the valid judgment or decree of any court of competent jurisdiction, such event shall not effect any of the remaining phrases, clauses, sentences, paragraphs and sections of this Ordinance since the same would have been enacted by the Town Council without the incorporation of this Ordinance of any such unconstitutional or illegal phrase, clause, sentence, paragraph or section.

Section 5. This Ordinance shall be effective immediately upon passage, publication in accordance with the law and approval by the Town Council and it is so ordained .

PASSED AND APPROVED ON THIS THE 14th DAY OF June, 2004.

TOWN OF SUNNYVALE TEXAS

BY: _____
Jim Phaup, Mayor

ATTEST:

_____
Anne Harrison, Town Secretary

EXHIBIT "A"

ARTICLE 9.700

STREET CUT AND USES OF PUBLIC RIGHT-OF-WAY ORDINANCE

§ 9.701 DEFINITIONS.

In this article:

A. BACKFILL means:

1. the placement of new dirt, fill, or other material to refill an excavation; or

2. The return of excavated dirt, or other material to fill an excavation.

B. CLOSURE means a complete or partial closing of one or more lanes of traffic of a thoroughfare for any period of time.

C. CONSTRUCTION means any of the following activities performed by any person within a public right-of-way:

1. Installation. excavation, laying, placement, repair, upgrade, maintenance, or relocation of facilities or other improvements, whether temporary or permanent.

2. Modification or alteration to any surface, subsurface. or aerial space within the public right-of-way.

3. Performance, restoration, or repair of pavement cuts or excavations.

4. Reconstruction of any of the work described in Section § 9.701C.1 thorough Section § 9.701C.3 of this subsection.

5. Other similar construction work.

D. DIRECTOR means the Director of Public Works or any designated representative.

E. EMERGENCY ACTIVITY means circumstances requiring immediate construction or operations by a public service provider to:

1. prevent imminent damage or injury to the health or safety of any person or to the public right-of-way; or

a. restore service; or

b. prevent the loss of service.

F. EXCAVATION means the removal of dirt, fill, or other material in the public right-of-way, including but not limited to the methods of open trenching, boring, pipe bursting, tunneling or jacking.

G. FACILITIES means the plant, equipment, buildings, structures, poles, wires, cables, lines, conduit, mains, pipes, vaults, and appurtenances of a public service provider and includes property owned, operated, leased, licensed used, controlled, or supplied for, by, or in connection with the business of the public service provider.

H. MAJOR PROJECT means any construction that requires a pavement cut of a length or 300 feet or greater within any single street or alley.

I. PAVEMENT CUT means a cut made into the paved surface of the public right-of-way.

J. PAVEMENT CUT AND REPAIR STANDARDS MANUAL means a manual published by the Town of Sunnyvale that contains engineering. technical. and other special criteria and standards established by the Director for pavement cut, excavation, backfill, restoration, and repair activities in the public right-of-way.

K. PERMITTEE means the person applying for or receiving a permit to perform construction within the Town's right-of-way under the terms and conditions of this ordinance. The term includes:

1. any officer, director, partner, manager, superintendent, or other authorized person exercising control over or on behalf of the Permittee; and

2. any contractor or subcontractor of the Permittee, for purposes of compliance with the *Town of Sunnyvale Pavement Cut and Repair Standards Manual* and the traffic control, construction, and maintenance requirements of this ordinance.

L. PERSON means a natural person, a corporation, a public service provider, a governmental entity or agency (including the Town), a limited liability company, a joint venture, a business trust, an estate, a trust, a partnership, an association, or any other legal entity.

M. PUBLIC RIGHT-OF-WAY means any area of land within the Town that is acquired by. dedicated to, or claimed by the public or town in fee simple, by easement, or by prescriptive right or that is expressly or impliedly accepted or used in fact or by operation of law as a public roadway, highway, street, sidewalk, alley, or utility access easement. The term includes the area on, below, and above the surface of the public right-of-way. The term

applies regardless of whether the public right-of-way is paved or unpaved. The term applies to any right-of-way shown on any preliminary plat or final plat that has been filed with the Town. The term does not include airwaves above the public right-of-way that fall under the exclusive jurisdiction of the United States government.

N. PUBLIC SERVICE PROVIDER means any wholesale or retail electric utility, gas utility telecommunications company, cable company, water utility, storm water utility, or wastewater utility, regardless of whether the public service provider is publicly or privately owned or required to operate within the Town pursuant to a franchise.

O. SPOILS or EXCAVATED MATERIAL means construction waste. construction supplies. or excavated dirt, fill, or other similar material that is stored or placed upon the surface of a public right-of-way.

P. TOWN means the Town of Sunnyvale and the Town's officers and employees

Q. SUBDIVISION means "subdivision" as defined in Town's Subdivision Ordinance.

R. THOROUGHFARE means: A public traffic arterial, parkway, collector, or country lane as designated in the Town's Transportation System Diagram as shown in the Town's comprehensive plan.

§ 9.702 DIRECTOR'S AUTHORITY; ENFORCEMENT; OFFENSES.

A. The Director is authorized to administer and enforce the provisions of this article, and to promulgate regulations including but not limited to engineering, technical, and other special criteria and standards, to aid in the administration and enforcement of this article that are not in conflict with this article, this code, or state or federal law.

B. The Director is authorized to enter upon a construction site for which a permit is granted under this article or, where necessary upon private property adjacent to the construction site, for purposes of inspection to determine compliance with the permit or this article.

C. A person commits an offense if he:

1. performs, authorizes, directs, or supervises construction without a valid permit issued under this article;

2. violates any other provision of this article;

3. fails to comply with restrictions or requirements of a permit issued under this article; or

4. fails to comply with an order or regulation of the Director issued pursuant to this article.

D. A person commits an offense if, in connection with the performance of construction in the public right-of-way, he;

1. damages the public right-of-way beyond what is incidental or necessary to the performance of the construction;

2. damages public or private facilities within the public right-of-way; or

3. fails to clear debris associated with the construction from a public right-of-way after construction is completed.

E. It is a defense to prosecution under § 9.702D.2 if the person complied with all of the requirements of this article and state law and caused the damage because the facilities in question:

1. were not shown or indicated in a plan document, plan of record, record construction drawing, or field survey, staking, or marking; and

2. could not otherwise be discovered in the public right-of-wav through the use of due diligence.

F. A person commits an offense if, while performing any construction or other activity along a pubic right-of-way (whether or not a building or other permit is required for the activity, the person:

1. damages the public right-of-way or public or private facilities located within the public right of way; or

2. fails to clear debris associated with the construction or other activity from a public right-of-way

G. It is a defense to prosecution under § 9.702F.1 and § 9.702F.2 that the person was performing all of the construction or other activity along the public right of way in compliance with any permit issued for the construction or activity.

H. A culpable mental state is not required to prove an offense under this article. A person who violates a provision of this article is guilty of a separate offense for each day or portion of a day during which the violation is committed, continued authorized, directed, or permitted. An offense under § 9.702D.3 or § 9.702F.2 is punishable by a fine of not less than $500 or more than $2,000. Any other offense under this article is punishable by a fine of $500.

I. This article may be enforced by civil court action in accordance with state or federal law, in addition to any other remedies, civil or criminal, the Town has for a violation of this article.

J. Prior to initiation of civil enforcement litigation, the Permittee or any other person who has violated a provision of this article must be given the opportunity to correct the violation within the time frame specified by the Director. This subsection does not prohibit the Director or the Town from taking enforcement action as to past or present violations of this article, notwithstanding their correction.

§ 9.703 REGISTRATION; OTHER REQUIREMENTS

A. Nothing in this section relieves a public service provider from obtaining permit under this article to perform work in the public right-of-way.

B. In order to protect the public health, safety, and welfare, a public service provider maintaining or operating existing facilities in the public right-of-way must register with the Director in accordance with the following requirement:

1. The registration must be on a form furnished by the Director and made in the name of the public service provider that owns the facilities.

2. Registration expires December 31 of every other year after the calendar year in which the first registration occurs. If a registration is not renewed by the expiration date, the facilities of the public service provider will be deemed to have been legally abandoned.

3. If information provided as part of the registration changes, the public service provider must inform the Director in writing not more than 30 days after the date the change occurs.

4. The public service provider shall also include the following with the registration:

   a. The name of the public service provider using the public right-of-way, including any business name, assumed name, or trade name the public service provider operates under or has operated under within the past five years.

   b. If the public service provider is a certificated telecommunications provider, the certificate number issued by the Texas Public Utility Commission.

   c. The ordinance number of any franchise or license issued by the Town of Sunnyvale that authorizes the public service provider to use the public right-of-way.

   d. The names, addresses, and telephone numbers of at least two persons who will be general, day-to-day contacts for the public service provider. At least one of the addresses must be within the Dallas/Fort Worth metropolitan area.

e. The name and mailing address of the officer or agent designated as the person authorized to receive service of process on behalf of the public service provider.

f. The name, address, and telephone number of any contractor or subcontractor, if known, who will be working in the public right-of-way on behalf of the public service provider.

g. The names and telephone numbers of at least two persons serving as emergency contacts who can be reached by telephone 24 hours a day, seven days a week. The telephone numbers should be accessible without the Town having to pay a long distance telephone or toll charge.

h. Proof of existing insurance that complies with the following requirements:

(1) The minimum insurance coverage for a public service provider must be commercial general liability insurance, or any combination of general liability and umbrella/excess insurance, (including, but not limited to, premises operations personal and advertising injury, products/completed operations, and independent contractors and contractual liability) with a minimum combined bodily injury (including death) and property damage limit of $25,000,000 per occurrence, $25,000,000 products/completed operations aggregate, and $25,000,000 general aggregate. The liability insurance policy must also include coverage for explosion, collapse, and underground hazards. The insurance coverage must be written by a company or companies approved to conduct business in the State of Texas. the Town must be named as an additional insured on the policy by using endorsement CG 20 26 or broader.

(2) The insurance filed by a public service provider must also meet the same requirements as insurance filed by a Permittee under § 9.706A.3 through § 9.706A.7. A public service provider has the same duties, obligations. and liabilities as a Permittee under § 9.706A.3 through § 9.706A.7. except that a public service provider does not have to file separate proof of insurance every time it obtains a permit to perform work in the public- right-of-way.

(3) If the public service provider is an entity that has a tangible net worth ratio of 3 to 1 (assets to liabilities) with a minimum tangible net worth of at least $100,000,000, proof of self-insurance sufficient to meet the coverage required in this subparagraph is sufficient to satisfy the insurance requirements of this subparagraph.

5. The insurance requirements of § 9.703B.4.h of this section do not apply to:

   a. construction or other activity performed by the Town's own forces or by contractors hired by the Town and working on Town-owned facilities within the public right-of-way; or

   b. a public service provider operating facilities or performing construction pursuant to a valid existing franchise or license approved by the Town council.

§ 9.704 PLANS OF RECORD

A. Any public service provider with facilities in the public right-of-way shall submit plans of record in accordance with the following requirements:

   1. On or before Sept. 30, 2004, a public service provider shall submit to the Director a schedule to provide complete plans of record that show all of its facilities existing in the public right-of-way as of the date the plans of record are submitted to the Director in compliance with this section. The schedule must provide for all plans of record for existing facilities to be furnished to the Director on or before Sept. 30, 2005.

   2. On or before January 1 of each calendar year following the initial submittal of its plans of record a public service provider shall provide to the Director plans of record that show all installations of new facilities, and all changes, additions, abandonments, and relocations relating to existing facilities, completed in the previous calendar year.

   3. The plans of record must be provided in a format specified by the Director and must contain such detail and accuracy as are required by the Director. Plans of record must be submitted in computerized or digital format.

B. If plans of record submitted under this section include information expressly designated by the public service provider as a trade secret or other confidential information protected from disclosure by state law, the Director may not disclose that information to the public without the consent of the public service provider, unless otherwise compelled by an opinion of the attorney general pursuant to the Texas Open Records Act, as amended, or by a court having jurisdiction of the matter pursuant to applicable law. This subsection may not be construed to authorize a public service provider to designate all matters in its plans of record as confidential or as trade secrets.

§ 9.705 PERMIT REQUIRED: EXCEPTIONS; CONDITIONS; DENIAL AND REVOCATION.

A. A person shall not perform any construction, except for an emergency activity, within a public right-of-way without first obtaining a permit from the Director prior to the start of

construction. A person who undertakes any work outside of the public right-of-way that will cut, break, or otherwise damage the public right-of-way shall also obtain a permit under this section.

B. A permit is not required under § 9.705A if the activity in the public right-of-way consist exclusively of:

1. a connection of real property to a retail utility service on the same side of the public right-of-way, if the connection does not require a pavement cut; or

2. the replacement of a single damaged pole.

C. The following procedures and requirements govern the application for and issuance of a perform construction within the public right-of-way:

1. A permit application must be made in writing on a form approved by the Director. The application must be signed and submitted by the owner of the facility for which the permit is requested or, if the work does not involve a facility, by the owner of the improvement for which the permit is requested.

2. Except in the case of a major project, a permit application must be submitted to the Director not less than two business days before commencement of the proposed construction unless emergency activity is required, in which case immediate notice, including the reasons for the emergency activity, must be given to the Director.

3. A permit application for a major project must be submitted enough time in advance of the commencement of the proposed construction to allow the Director at least 30 business days for review. During this project submission review period, schedules, alternatives to cutting the street, utility assignments, special repair requirements, and all other questions will be resolved. Adjustments to time limits specified in the *Pavement Cut and Repair Standards Manual* may be granted by the Director for major project work. The proposed construction on the project may commence upon issuance of the permit by the Director.

4. A permit application must include a statement by the applicant that the applicant has collected all available plans for existing town of Sunnyvale underground facilities and other public and private utilities and has included those facilities and utilities in the applicant's design, showing no apparent conflict. The statement must also affirm that the applicant will perform field verifications as necessary during construction to locate all town and other existing underground facilities.

5. The permit application on any project must include submittal of plans to the Director. When required by the Texas Engineering Practice Act, as-amended, the plans must be

sealed by a professional engineer licensed to practice in the State of Texas. The plans must-include the horizontal alignment of all proposed facilities in relation to all existing public and private facilities in plan view. If the project is a major project that is located within the central business district, crosses street intersections, or involves crossing proposed facilities over or under existing facilities, the plans must also include a representation of the vertical alignment of the facilities in profile view. Each sheet of the plans must have a note instructing the contractor to verify the location of underground utilities at least 100 feet in advance of all proposed utility crossings, and also at locations where the proposed facilities are shown to be running parallel to existing facilities within five feet. The plans must be half size (11" X 17") at a scale no smaller than 1" = 40' in plan view and 1" = 5' in profile view. Each project must be assigned a project number, which must appear on each sheet.

6. A permit is required even if other authority has been granted by the Director to make a pavement cut or excavation in a public right-of-way as part of a town construction project.

7. the Director shall state on the permit the activity for which the permit is issued and include any additional restrictions or requirements determined necessary by the Director.

8. The Permittee has the exclusive responsibility to coordinate with other public service providers to protect all existing facilities in the public right-of-way in which the construction occurs.

9. The Permittee shall, as an express condition of the permit, comply in all respects with the requirements prescribed for the permitted activity in the *Pavement Cut and Repair Standards Manual* and with all other town ordinances and state or federal laws or regulations affecting the permitted activity.

10. The Director shall notify public service providers that registered under Section § 9.703 during the previous calendar year of pavement surfaces to be reconstructed or resurfaced by the Town during the next calendar year.

11. A public service provider planning construction within the public right-of-way shall notify the Director by March 1 of each year of all then-known facility expansion or replacement projects planned for the next fiscal year that may require pavement cuts or excavations.

12. The Director may require any Permittee to use trenchless technology or boring, instead of disturbing a public right-of-way surface, if it is:

a. in the best interest of the Town;

b. technically, commercially, and economically feasible; and

c. not in violation of federal or state regulations or industry safety standards.

13. In using trenchless technology or boring the Permittee must:

a. obtain and have at the construction site recent plans from the Town's water utilities department, and, where available, plans from owners of all other underground facilities, showing the horizontal and vertical placement of the underground facilities, if the Permittee's proposed facilities will:

(1) cross other existing facilities; or

(2) be located within five feet of existing facilities at any point;

b. locate all water main lines by potholing if the Permittee's proposed facilities will:

(1) cross other existing facilities; or

(2) be located within five feet of existing facilities at any point; and

c. be able to locate the bore head at all times in accordance with the latest technologies and provide the location of the bore to the Director upon request.

14. The Permittee shall maintain the construction area in a public right-of-way in a manner that avoids dust, other health hazards, and hazards to vehicular and pedestrian traffic until the public right-of-way is permanently repaired.

15. When making a pavement cut or excavation, or placing spoils or excavated material in or along a public right-of-way, the Permittee shall place barricades, warning signs, and warning lights at the location sufficient to warn the public of the hazard of the cut, excavation, spoils, or excavated material in compliance with the latest edition of the Texas Manual on Uniform Traffic Devices, as amended; published by the Texas Department of Transportation.

16. The Director may require the Permittee to share trench space to minimize the disruption of vehicular and pedestrian traffic or to provide space for needed town facility installations if such sharing is:

a. technically, commercially, and economically feasible; and

b. not in violation of state or federal regulations or industry safety standards.

D. The following additional procedures apply if it is necessary to close, in whole or in part, a public right-of-way for purposes of making a pavement cut or an excavation:

1. For any closure of a traffic lane or blocking of a sidewalk or alley lasting one day or less, the Permittee shall conspicuously mark its vehicles with the Permittee's name and telephone number.

2. Any closure of a traffic lane or blocking of a sidewalk or alley lasting longer than one day must be identified by a sign that is clearly legible to the traveling public. The sign must be posted at or in close proximity to the worksite and must contain:

   a. the name of the Permittee;

   b. the name of the person performing the construction on behalf of the Permittee, if any; and

   c. a local 24-hour contact number that can be used in case of emergency or to answer any questions.

3. The requirements of § 9.705D.1 and § 9.705D.2 of this subsection are in addition to any other signage, barricades, or warning devices required by law or ordinance. The sign information required by § 9.705D.2 of this subsection may be included on barricades or warning devices.

4. When permitted construction will last longer than two weeks the Permittee shall give written notification to all adjacent property occupants by conspicuously posting the notification on each adjacent property at least 72 hours before commencement of construction, unless the Director determines that an emergency exists.

5. If a street or alley must be totally closed for any duration, the Permittee shall provide for reasonable alternative access to the adjacent property by the property's occupants and invites, which access must include but is not limited to deliveries to the property.

6. If construction on a partially closed thoroughfare stops for the day, all thoroughfare lanes must be reopened to traffic, unless an extended time of closure is expressly granted by the permit.

7. If a pavement cut is to be covered, the Permittee shall use steel plates, or equivalent plates, of sufficient strength and thickness to support all traffic.

8. Plates must be sufficiently secured in place so as not to become dislodged or in any wav cause a hazard to any traffic. Asphalt transitions must be placed as required to provide a reasonably smooth riding surface.

9. Plates must be marked with the name of the person performing the construction and with a local 24-hour contact number that can be used in case of an emergency, unless a sign complying with § 9.705D.2 of this subsection is posted at or in dose proximity to the worksite.

E. Unless it becomes necessary to conduct emergency activity, a Permittee shall not cause or allow interference with traffic flow on a thoroughfare during the hours of 6:30 a.m. through 9:30 a.m. and 3:30 p.m. through 6:30 p.m.. Monday through Friday.

F. A temporary repair may not remain on public right-of-way for more than 14 calendar days after the completion of the repair or installation of the underground structure or facility unless a time extension has been granted by the Director. The Town may, at the expense of the Permittee or other responsible person, remove any temporary repair remaining in the public right-of-way beyond the 14-day time limit and make permanent repairs. Any exception to the 14-day time limit, other than a relocation of a facility in advance of a town construction project in the public right-of-way, must be approved by the Director prior to expiration of the time limit.

G. If no construction has commenced under a permit within 120 calendar days after issuance of the permit, the permit becomes null and void, and a new permit is required before construction may be performed in right of way. An extension to a permit may be granted by the Director only before the permit expires.

H. The Director may refuse to issue a permit if:

1. the proposed construction will substantially interfere with vehicles or pedestrians and no procedures, or procedures inconsistent with this article, have been implemented to minimize the interference;

2. the proposed construction will substantially interfere with another activity for which a permit has been issued, or will conflict or interfere with existing facilities already in the public right-of-way;

3. the proposed barricading, channelizing, signing, warning, or other traffic control procedures or equipment do not comply with the requirements of the latest edition of the Texas Manual on Uniform Traffic control Devices, as amended;

4. the proposed construction, incidental traffic control, or other permitted activity, or the manner in which it is to be performed, will violate a Town ordinance or regulation or a state or federal statute or regulation;

5. the Permittee:

   a. failed to furnish all the information required by this article;

   b. knowingly or intentionally furnished materially false or incorrect information to the Director;

   c. failed, except for good cause shown, to file the application on the approved form within the time limits prescribed by this section;

   d. failed or refused to submit plans of record as required under § 9.704;

   e. was convicted of violating a provision of this article twice within the two year period immediately preceding the date of application;

   f. failed to furnish or have on file with the Director the insurance required under this article;

   g. is not in compliance with applicable requirements of an existing permit issued under this article; or

   h. has not obtained a current copy of the *Pavement Cut and Repair Standards Manual* from the Director.

I. The Director may suspend construction or revoke an issued permit on the same grounds on which a permit may be denied under § 9.705H.5.h, or if the Permittee:

1. commences or performs construction in violation of an applicable requirement of this article or the permit;

2. creates or is likely to create a public health or safety hazard by performance of the construction in question;

3. fails to comply with an order or regulation of the Director;

4. fails to comply with restrictions or requirements of other Town ordinances or state or federal laws or regulations applicable to the construction; or

5. commences or performs work without having prior knowledge and understanding of the applicable repair standards or without having obtained a current copy of the *Pavement Cut and Repair Standards Manual* from the Director.

J. The Director shall provide written notice of a suspension or revocation to the Permittee or the person hired by the Permittee to perform the construction. Construction that is suspended may not resume until the Director determines that Permittee has corrected the violation, noncompliance, or hazard that caused the suspension. A permit that has been revoked may be reinstated by the Director if the Director determine that:

1. the Permittee has corrected the violation noncompliance, or hazard that caused the revocation; and

2. the healthy or safety of the public is not jeopardized by reinstating the permit.

K. Any variance from the requirements of this article must be approved in advance by the Director. The Director may grant a variance only if an extreme hardship exists and the public health, safety, welfare, and convenience is not adversely affected by granting the variance. The Director may not approve any variance that would give a competitive advantage to one public service provider over another public service provider providing the same or similar service. The Director may not grant a variance from the indemnity requirements of § 9.706D.

§ 9.706 INSURANCE AND INDEMNITY REQUIREMENTS:

A. As an express precondition to being granted a permit to perform construction within a public right-of-way, the Permittee shall furnish the Director proof existing insurance in accordance with the following requirements:

1. If the construction will require a pavement cut or excavation not more than 18 inches in depth and 300 feet in length, the Permittee *must* provide proof of commercial general liability insurance (including, but not limited to, premises operations, personal and advertising injury products/completed operations, and independent contractors and contractual liability) with a minimum combined bodily injury (including death) and property damage limit of $500,000 per occurrence, $500,000 products/completed operations aggregate, and $500,000 general aggregate. The insurance coverage must be written by a company or companies approved to conduct business in the State of Texas. The Town must be named as an additional insured on the policy by endorsement CG 20 26 or broader.

2. If the construction will require a pavement cut or excavation exceeding either 18 inches in depth or 300 feet in length, the Permittee must provide proof of commercial general liability insurance, or any combination of general liability and umbrella/excess insurance, (including, but not limited to, premises operations, personal and advertising injury,

products/completed operations, and independent contractors and contractual liability) with a minimum combined bodily injury (including death and property damage limit of $1,000,000 per occurrence, $2,000,000 products/completed operations aggregate and $2,000,000 general aggregate. The liability insurance policy must also include coverage for explosion, collapse, and underground hazards. The permitte shall obtain, pay for and maintain an excess liability umbrella insurance policy for an amount of not less than $5,000,000 combined single limit bodily injury and property damage liability insurance, including death, in excess of the primary coverage required hereinabove. The insurance coverage must be written by a company or companies approved to conduct business in the State of Texas. The Town must be named as an additional insured on the policy by using endorsement CG 20 26 or broader.

3. Each policy must include a provision that requires the insurance company to notify the Town in writing at least 30 days before canceling or failing to renew the policy or before reducing policy limits or coverages.

4. The Permittee agrees, with respect to the insurance coverage required by this subsection, to waive subrogation against the Town and its officers and employees for bodily injury (including death), property damage, or any other loss.

5. The insurance coverage required by this subsection is considered primary insurance in regard to the Town and its officers, employees, and elected representatives.

6. Proof of insurance in the form of an ordinal industry standard certificate of insurance showing the Town as an additional insured must be provided to the Director prior to any commencement of work by the Permittee. The certificate of insurance must be executed by the insurer or its authorized agent and must state specific coverage, limits, and expiration dates in accordance with the requirements of this subsection.

7. The Permittee shall make available to the Director, upon request, a copy of the insurance policy, including any endorsements, riders, and amendments to the policy and any statements respecting coverage under the policy.

B. A Permittee who is a public service provider who has registered and filed proof of insurance under § 9.703 of this article is not required to furnish separate proof of insurance under this section when obtaining a permit, but must comply with all other requirements of this section.

C. If the Permittee is an entity that has a tangible net worth ratio of 3 to 1 (assets to liabilities) with a minimum tangible net worth of at least $1,000,000 proof of self-insurance sufficient to meet the coverage required in Subsection (a) is sufficient to satisfy the requirements of that subsection.

D. The following indemnity provisions apply to a public service provider registered under § 9.703 and are also included by reference as express terms of a permit issued under this article:

1. A Permittee who is a certificated telecommunications provider as defined in Chapter 283, Texas Local Government Code, as amended, agrees to give to the Town the indemnity provided in Section 283.057 Texas Local Government Code, as amended.

2. A Permittee, other than a certificated telecommunications provider described in § 9.706D.1 of this subsection, expressly agrees to fully and completely defend, indemnify, and hold harmless the Town and its officers, agents, and employees, against any and all claims, lawsuits, judgments, costs, and expenses for personal injury (including death), property damage or other harm for which recovery of damages is sought, suffered by any person or persons, that may arise out of or be occasioned by any negligent, grossly negligent, wrongful, or strictly liable act or omission of the Permittee or its agents; employees, or contractors, in the performance of work or activity pursuant to the permit issued under this article, regardless of whether or not the negligence, gross negligence, wrongful act, or fault of the Town or its officers, agents, or employees, contributes in any way to the damage, injury, or other harm. The requirement of the Permittee to defend the Town also unconditionally applies regardless of whether or not the negligence, gross negligence, or fault of the Town or its officers, agents, or employees contributes in any wav to the damage, injury, or other harm. Nothing in this paragraph may be construed as waiving any governmental immunity available to the Town under state law. This provision is solely for the benefit of the Permittee and the Town and is not intended to create or grant any rights, contractual or otherwise, in or to any other person.

E. This section does not apply to:

1. construction or other activity performed by the Town's own forces or by contractors by the Town and working on town-owned facilities within the public right-of-way;

2. construction or repair of a sidewalk or driveway approach for an abutting single-family residential property owner.

§ 9.707 MAINTENANCE BOND; LETTER OF CREDIT; ESCROW FUND.

A. General. As an express precondition to being granted a permit to perform construction within a public right-of-way, the Permittee shall furnish the Director a maintenance bond, letter of credit, or escrow fund, complying with this section, for any project that involves pavement excavation or boring for the installation of a new facility or for a significant facility relocation other than an excavation or boring for a localized new service line installation or facility repair. Without exception, the Town's forms must be used, and exclusive venue for any lawsuit is specified as Dallas County. A maintenance bond will automatically be

increased by the amount of any change order, which increases the contract price with or without notice to the surety, but in no event may a change, which reduced the contract amount, reduce the penal sum of the bond.

B. Amount. A good and sufficient bond, letter of credit, or escrow fund in an amount not less than 100 percent of the total cost, as determined by the Director, of those items of work associated with the temporary and permanent repair of the Town's infrastructure, including, but not limited to backfill, pavement base, street pavement, curb and gutter, drive approaches, sidewalk, sod, irrigation, landscape, traffic control devices, signs, and pavement markings, guaranteeing the full and faithful execution of the work and performance of the contract in accordance with the plans, specifications, and contract documents, including any extensions thereof, for the protection of the Town. The bond, letter of credit, or escrow fund must provide for the repair and/or replacement of all defects due to faulty materials and workmanship that appear within a period of two years from the date of completion and acceptance of the work by the Town. The Permittee may choose to have the amount determined on a per project basis or an aggregate basis. If on an aggregate basis, the amount of a single bond, letter of credit, or escrow fund must be sufficient to cover all of Permittee's projects outstanding at any one time. If the amount of the Permittee's outstanding projects exceeds an existing bond, letter of credit, or escrow fund, the Permittee shall immediately increase it or post a new bond, letter of credit, or escrow fund to cover the project that has caused the deficiency.

C. Sureties. No surety may be accepted by the Town who is in default or delinquent on any bonds or who is interested in any litigation against the Town. All bonds must be made on the forms furnished by the Town and must be executed by not less than one corporate surety authorized to do business in the State of Texas and acceptable to the Town. Each surety must be listed in the most current Federal Register Treasury List. The Permittee and the surety shall execute each bond. The surety shall designate a resident agent in the Dallas County acceptable to the Town to whom any requisite notices may be delivered and on whom service of process may be had in matters arising out of such suretyship. The Town reserves the right to reject any and all sureties.

D. Additional or substitute bonds. If at any time the Town is or becomes dissatisfied with any surety on a maintenance bond, the Permittee shall, within five days after notice from the Town to do so, substitute an acceptable bond, or provide an additional bond, in such form and sum signed by such other surety as may be satisfactory to the Town. The premiums on the bonds must be paid by the Permittee without recourse to the Town.

E. Letter of credit. In lieu of a performance bond, a Permittee may provide an irrevocable letter of credit. Each letter of credit must be made on a form furnished by the Town.

F. Escrow fund. In lieu of a performance bond, a Permittee may establish an escrow fund, for the benefit of the Town, pursuant to an agreement in a form acceptable to the Town Attorney."

§ 9.708 MISCELLANEOUS REQUIREMENTS FOR STREET EXCAVATION AND INSTALLATIONS AND TRENCH SAFETY.

A. In addition to the other requirements of this article, a pavement cut, excavation, or repair necessitated by or as a result of construction inside or outside of the public right-of-way must comply with all of the requirements contained in this section.

B. General.

1. A pavement cut in the public right-of-way may be made prior to obtaining a permit only if a valid need to perform emergency activity exists. Immediate notice, including the reasons for the emergency activity, must be given to the Director. Whenever an emergency activity cut is made, application for a permit must be made not later than the second business day following commencement of the emergency activity.

2. A pavement cut that is made in a newly constructed, reconstructed, or resurfaced asphalt street that is not more than 60 months old will require that, in addition to repairs made in compliance with the *Pavement Cut and Repair Standards Manual*, a surface treatment must be applied that consists of slurry seal or micro-surfacing, or an equivalent method approved by the Director, for the purposes of sealing the repair edges of the cut and maintaining uniformity in appearance with the surrounding street surfaces. No surface treatment is required if the repairs are made to match pavement color and are approved by the Director. The application of slurry seal or micro-surfacing must be made to the entire block of the street in which a cut is made. For an undivided street, the application must be made from curb to curb, and for a divided street, from median curb to outside curb.

3. The Permittee and any person responsible for construction shall protect the public right-of-way surface, drainage facilities, and all other existing facilities and improvements from excavated materials, equipment operations, and other construction activities. Particular attention must be paid to ensure that no excavated material or contamination of any type is allowed to enter or remain in a water or wastewater main or access structure, drainage facility, or natural drainage feature.

C. Two-year Maintenance Period.

1. All construction must be done in a good and workmanlike manner and in faithful and strict compliance with the permit, this article, other town ordinances, and regulations promulgated by the Director relating to construction within the public right-of-way.

2. All construction performed under any permit granted to a Permittee by the Town under this article must be maintained to the satisfaction of the Director for two years after the date of completion of the construction or repair.

3. Any damage to, or any defect or other problem in, the permitted construction occurring at any time within two years after the completion of work under the permit must be corrected to the satisfaction of the Director within 10 days after the Director gives notice to the Permittee to correct the damage, defect, or other problem.

4. The opinion of the Director as to the necessity of correcting any damage, defect, or other problem is binding on all parties.

D. Repairs.

1. All damage caused directly or indirectly to the public right-of-way surface or subsurface outside the pavement cut or excavation area will be regarded as a part of the pavement cut or excavation and must be included in the total area repaired. If repaired by the Town, the Permittee shall reimburse the Town for the actual direct and indirect costs of the repair.

2. The Director shall notify the Permittee if the backfill on a permitted construction settles at any time during the two-year maintenance period required in § 9.708C of this section, causing subsidence in the pavement of one-half inch or more, vertically measured in any three-foot horizontal direction. Upon notification, the Permittee shall schedule appropriate repair work and promptly notify the Director of the anticipated dates of commencement and completion of the repair work. If the repair work is not commenced or completed within the agreed-upon time schedule, or if no response is received by the Director within 24 hours after notification to the Permittee, the repair work may be performed by the Town. The Permittee shall reimburse the Town for the actual direct and indirect costs of any repair work performed by the Town.

3. The Permittee shall notify the Director at least 24 hours before commencing any repair operations under § 9.708D.2 of this subsection.

E. Trench Safety.

1. Trench safety systems that meet U. S. Occupational Safety and Health Administration standards are required for construction in which trench excavation will exceed a depth of five feet.

2. § 9.708E.1 of this subsection does not apply to a construction contract entered into by a Permittee that is subject to the safety standards adopted under Chanter 121, Texas Utilities Code, as amended.

F. Tests.

1. The Permittee will be required to provide a certified construction materials testing lab, or use a testing method approved by the Director, to perform the appropriate tests, at the Permittee's expense, to ensure quality control for the backfill and pavement construction phases. Backfill shall be tested at a frequency of one test per 400 feet of trench per foot of backfill depth. Test shall be performed at a location and depth as selected by the Director's representative.

2. Unless another method is approved by the Director, tests must be made in accordance with the latest methods of the American Society of Testing and Materials. The results from tests for backfill compaction must be supplied to the Town within three days of the backfill work completion and before pavement construction begins. The results from tests for pavement construction must be submitted within one week of completion of the project. Retesting after failure to pass the required tests will be at the expense of the Permittee.

3. Compaction testing is not required when flowable type backfill material is used and accepted.

4. If the materials used for the street repairs do not meet the minimum requirements of the *Pavement Cut and Repair Standards Manual*, they may be considered unacceptable and may be ordered to be removed and replaced at the Permittee's expense. In cases where the repairs are unacceptable and the Permittee refuses to make them acceptable, the work may be accomplished by the Town, and all of the direct and indirect costs will be charged back to the Permittee responsible for the work.

5. The Town at its expense may perform, or have performed, any material tests it deems necessary to verify conformance with the specifications set forth in Paragraph (6) of this subsection. If tests performed at the Town's expense show cause for additional work or rework by the Permittee, then further testing required to show conformance with the specifications will be at the expense of the Permittee, including the cost of the original testing that showed the need for additional work or rework.

6. Specifications for backfill compaction must meet the requirements contained in the *Pavement Cut and Repair Standards Manual*. Specifications for pavement testing must meet the requirements contained in the applicable provisions of the *Standard Specifications for Public Works Construction –North Central Texas*."

§ 9.709 RESTORATION REQUIREMENTS

A. The *Pavement Cut and Repair Standards Manual* and the requirements of this section govern the restoration of public right-of-way surfaces within the Town. For those restoration

activities not covered by the *Pavement Cut and Repair Standards Manual* or this section, the applicable provisions of the *Standard Specifications for Public Works Construction - North Central Texas* will govern.

B. A Permittee performing construction in the public right-of-way shall restore the public right-of-way to a condition that is equal to or better than the condition prescribed by the most recent version of the *Pavement Cut and Repair Standards Manual* or other applicable town design and construction standards.

C. Restoration work must be performed to the satisfaction of the Director. Restoration work must include, but is not limited to, the following:

1. Replacement of all sod or ground cover with sod or ground cover equal to or better than the type damaged during the work, either by sodding or seeding as required by the Director.

2. Installation or reinstallation of all manholes and handholes, as required by the Director.

3. Backfilling and compaction of all completed bore pits potholes trenches, or other holes, which must be performed on a daily basis unless other safety requirements are approved by the Director.

4. Street, sidewalk, and alley repair that conforms with the standards for construction established in this article and by the Director.

5. Leveling of all trenches and backhoe lines.

6. Restoration of the excavation site to the specifications and requirements established in this article and by the Director.

7. Restoration of all landscaping, ground cover, and sprinkler systems.

8. Restoration of any damaged traffic control devices, including but not limited to imbedded loop detectors, pavement markings, underground conduits, and signs.

D. All location flags must be removed during the cleanup process by the Permittee or the Permittee's contractor at the completion of the work.

E. Restoration of special street, sidewalk, or drive approach surfaces designed to present unique visual images, color, or designs (regardless of the type, color, pattern, or texture of special material or process used) must be done so that the restoration matches the color, texture, and pattern of the surrounding special surfaces.

F. Restoration must be made in a timely manner. If restoration is unsatisfactory or not performed in a timely manner, then all of the Permittee's work in progress on the project in question (except for that work related to the problem of unsatisfactory restoration) will be halted, and no other permit will be approved until all restoration is complete. Any hold on the Permittee's work will include work previously permitted but not completed.

§ 9.710 CLEARANCE FOR STREET PAVING AND STORM DRAINAGE PROJECTS.

A. A person making a pavement cut or excavation for the purpose of adjusting facilities at the request of the Town in advance preparation for a town street paving or storm drainage project shall obtain a permit under this article, except that the time limits prescribed in § 9.705C and § 9.705G do not apply.

B. The Permittee shall maintain the pavement cut or excavation until the work order authorizing the construction of the street paving or storm drainage project is issued by the Town. Upon notification by the Director of any problem with the maintenance of the cut or excavation, the Permittee shall promptly correct the problem. The Permittee shall notify the Director of the anticipated date of correction. If the correction is not made by the anticipated date, or if no response is received by the Director within 24 hours after the Director gives notice to the Permittee, the correction may be made by the Town, and the Permittee shall reimburse the Town for the actual direct and indirect costs of the correction.

§ 9.711 CONFORMANCE WITH PUBLIC IMPROVEMENTS.

A. Whenever the Town or the Director deems it necessary to remove, alter, change, relocate, or adapt the underground or overhead facilities of a public service provider in the public right-of-way due to the Town's reconstruction, widening, or straightening of streets; replacement of water or wastewater facilities; installation of traffic signals, traffic signs, and markings; or construction of any other town public improvement project, the public service provider that owns the facilities shall conform its facilities with the project as prescribed by the Director.

B. The facilities must be conformed, at the public service provider's expense, within 90 days after the Director issues notice to the public service provider, unless a different schedule for the work is approved by the Director.

C. Facilities of a public service provider that are not conformed within the 90-day notice period or within the approved schedule will be deemed abandoned, and the Town will not be liable for any damage to or destruction or removal of the facilities, or for any interruption or termination of service through the facilities, caused by the activity of the Town described in this section.

§ 9.712 IMPROPERLY CONSTRUCTED FACILITIES.

A. A Permittee shall:

1. properly construct, install, operate, repair, relocate, upgrade, and maintain its facilities existing within the public right-of-way; and

2. repair or restore any damage to other facilities, the public right-of-way, or private property that occurs as a result of improper construction, installation, operation, repair, relocation, upgrade, or maintenance of the Permittee's facilities.

B. Facilities will be considered to be improperly constructed, installed, operated, repaired, relocated, upgraded, or maintained if:

1. the construction, installation, operation, repair, relocation, upgrade, or maintenance endangers public health or safety or creates a public inconvenience;

2. the facilities encroach upon private property or extend outside the right-of-way location designated in the permit;

3. above-ground facilities located within the right-of-way are less than one and one-half feet from the face of the curb or less than six inches from a sidewalk;

4. the construction, design, or configuration of the facilities does not comply with applicable local, state, or federal laws or regulations;

5. the construction, installation, operation, repair, relocation, upgrade or maintenance is conducted in a manner that damages private property or another public service provider's facilities;

6. the facilities are not capable of being located or maintained using standard practices; or

7. the facilities are placed in an area that interferes with another public service provider's facilities.

C. It is a defense to prosecution under § 9.712B.3 and § 9.712B.4 of this section that the facilities were constructed or installed in the public right-of-way before the effective date of this ordinance.

D. Nothing in this section may be construed to diminish the authority of the Director to require specific placement of specific facilities.

§ 9.713 EMERGENCY REPAIRS.

A. If the Director determines during construction that an emergency repair to a public right-of-way is necessary to correct a situation that is hazardous to the public, the Director shall immediately notify the Permittee. If the Permittee does not commence the emergency repair promptly, the Director may, in his sole discretion, cause performance of such emergency repair work as is necessary to correct the hazardous situation. The Permittee shall reimburse the Town for the actual direct and indirect costs of the work necessary to correct the hazardous situation, including cleanup. The Permittee shall maintain the emergency repair until the Permittee completes final repairs.

B. If the Director determines that a problem with a public service provider's existing facility in a public right-of-way requires an emergency repair to correct a situation that is hazardous to the public, the Director shall immediately notify the public service provider. If the public service provider does not commence the emergency repair promptly, the Director may, in his sole discretion, cause performance of such emergency repair work as is necessary to correct the hazardous situation. The public service provider shall reimburse the Town for the actual direct and indirect costs of the work necessary to correct the hazardous situation, including cleanup. The public service provider shall maintain the emergency repair until the public service provider completes final repairs.

§ 9.714 DRIVEWAYS NOT TO BE WITHIN THREE FEET OF POLES, ETC.

A. No person shall open up or construct any driveway or other way for the use of any character of vehicle on or across any sidewalk, parkway or other space between any public improved roadway and any private property so as to include or to be within less than three feet of any telephone, telegraph, electric light, or other pole, anchor, or guy wire, or any water plug, mailbox, or other structure located in such portion of any public street in the Town where such structure is so located by virtue of any franchise, license, permit, or other right.

§ 9.715 REMOVAL OF POLES, ETC., TO PERMIT CONSTRUCTION OF DRIVEWAYS - REQUIRED.

A. Wherever any person desires to locate any driveway and there is any structure that under § 9.714, would prevent the location of such driveway as desired, the person owning such structure or having the right to so maintain it shall move it as far as may be necessary to permit the desired location of such driveway, if the person desiring to locate the driveway first complies with all of the terms of this article.

§ 9.716 SAME - PLANS TO BE APPROVED BY DIRECTOR.

A. In the event any poles, structures, or improvements are to be located and installed in or upon any public street in the Town or relocated for the convenience or necessity of the person

maintaining them, the person desiring to construct, erect, install, or relocate such poles, structures, or improvements shall first submit to the Director a sketch or blueprint of the plan of such construction or relocation for approval. the Director shall immediately inspect the sketch or blueprint of the plan and, if satisfactory, the Director shall approve the plan. Until such approval is given, no work may be done in that connection If the plan of construction or relocation does not meet with the Director's approval, the Director shall return the plan to the person submitting it with any objections. The construction or relocation of all structures, improvements, and poles must be subject to the supervision of the Director.

§ 9.717 SAME - ALLOCATION OF COSTS FOR RELOCATION.

A. Any person desiring to locate or open a driveway, the location of which is prevented by reason of any structure described in § 9.714, and who desires to secure the shifting of the structure so as to permit such location shall, at the time of filing an application for a permit with the building official to construct, locate, or open such drive and prior to locating, constructing, or opening the drive, file a sketch drawing, or map with the Director that shows the location of the proposed drive or other way, and the relative location of the structure or structures in the way of the proposed driveway and the name of the person maintaining the structure obstructing the proposed driveway or preventing its location. the Director shall immediately notify the person maintaining the structure on the street, giving the name of the persons desiring the structure or structures moved;

B. Immediately upon the filing of the drawing, sketch, or map under § 9.717A the Director shall prepare or obtain a statement of the expense or cost of the removal of the structure. The person requesting the relocation of the structure shall pay the cost of relocation. Upon the ascertainment of the estimated cost or expense as found by the Director, such person shall deposit the sum of money required with the Director, and then the person maintaining the structure shall promptly remove the structure so as not to interfere with the proposed driveway. Upon completing movement of the structure, with all attachments to the satisfaction of the Director, the person moving or relocating the structure is entitled to receive the deposit.

§ 9.718 PERMIT FOR DRIVEWAY TO BE ISSUED AFTER POLES, ETC., REMOVED.

A. As soon as the structure interfering with the construction, location, or opening of the proposed driveway has been moved out of the way, the building inspector shall issue a permit authorizing the location, construction, or opening of such way as may be desired upon compliance with all other applicable town ordinances.

§ 9.719 APPEALS.

A. If either the person maintaining any pole or structure described in § 9.714 or the person desiring the structure or pole to be moved is dissatisfied with the estimate of the expense

made or obtained by the Director under this division or as to the location of the pole or structure, either or both of them may appeal from the decision by filing with the Town controller a statement of their objections within five days from the date of the Director's findings of the estimated expense or location.

§ 9.720 FEE WHERE POLES, ETC., TO BE RELOCATED.

A. At the time the person files the sketch seeking the removal of any obstructing structure described in § 9.714, he shall also pay the building inspector a fee of one dollar, which must be used in defraying the expense of carrying out the provisions of this article and for no other purpose."